Fig. 3

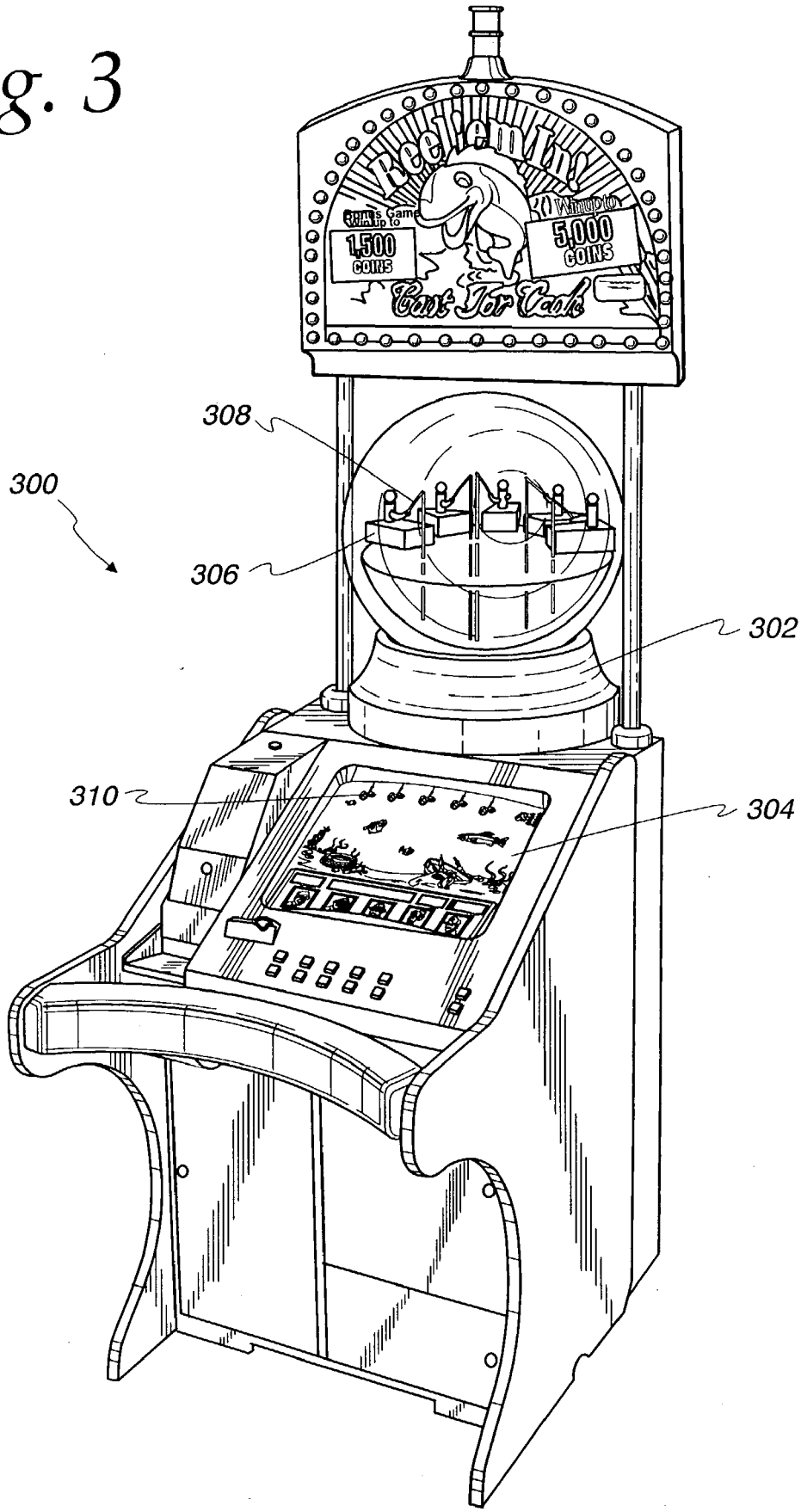
Reelemtns
Bonus Game Win up to
1,500 COINS
20 Win up to
5,000 COINS
Cast For Cash
308
300
306
302
310
304