FIG. 18

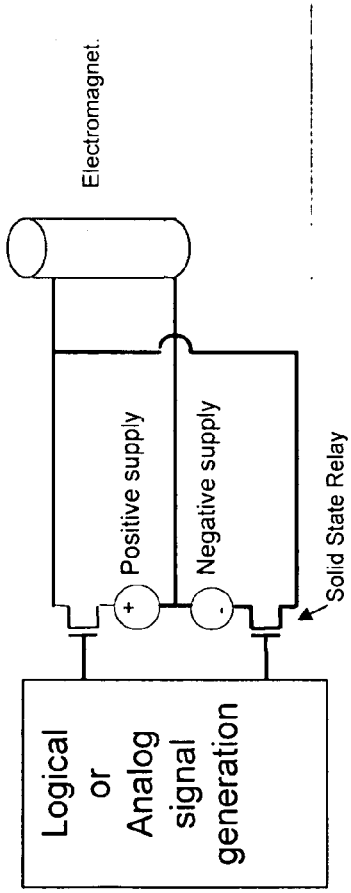

FIG. 18A) Circuit design for reversible magnetic field

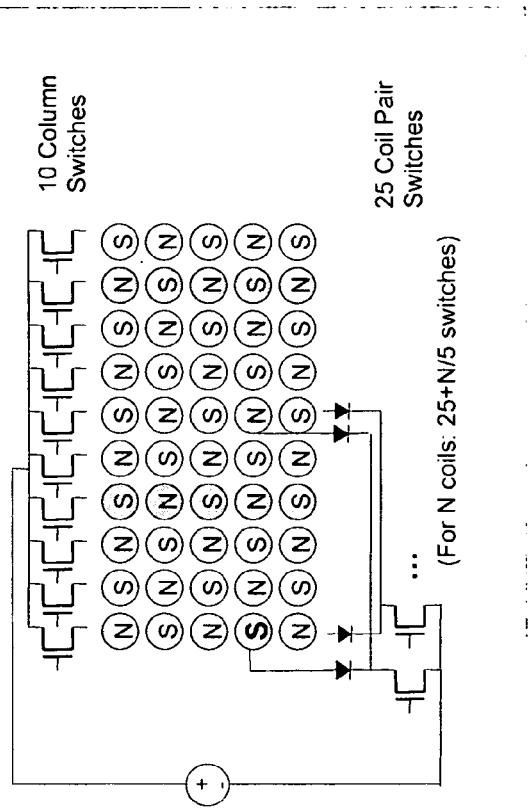

FIG. 18B) Circuit design to reduce # of switches