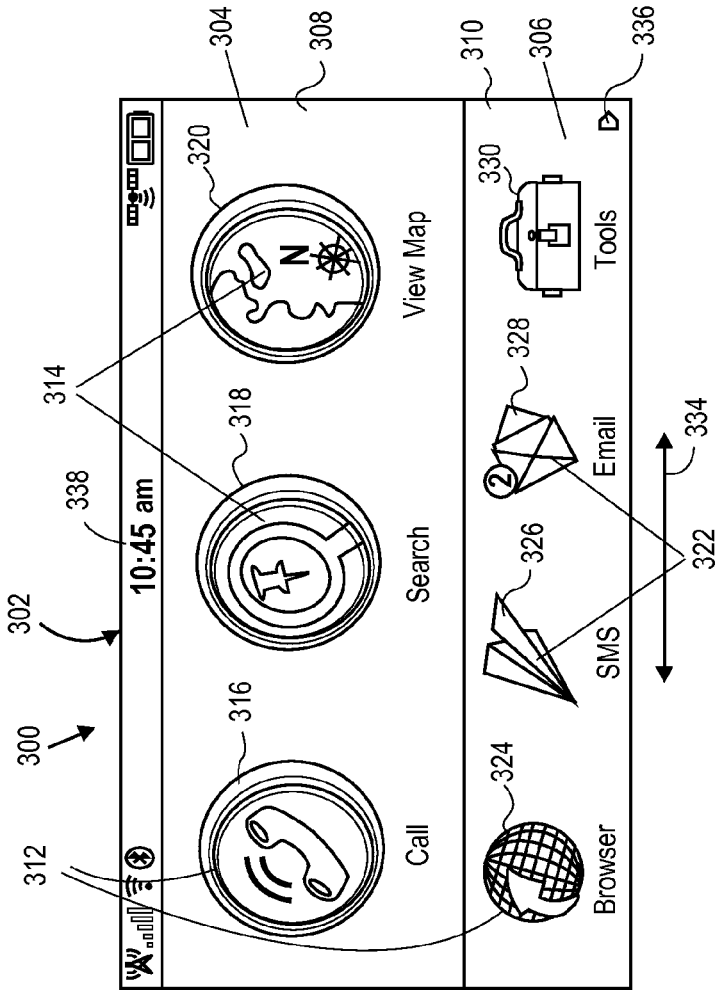
300
302
304
306
308
310
312
314
316
318
320
322
324
326
328
330
332
334
336
338
10:45 am
Call
Search
View Map
Browser
SMS
Email
Tools

FIG. 4

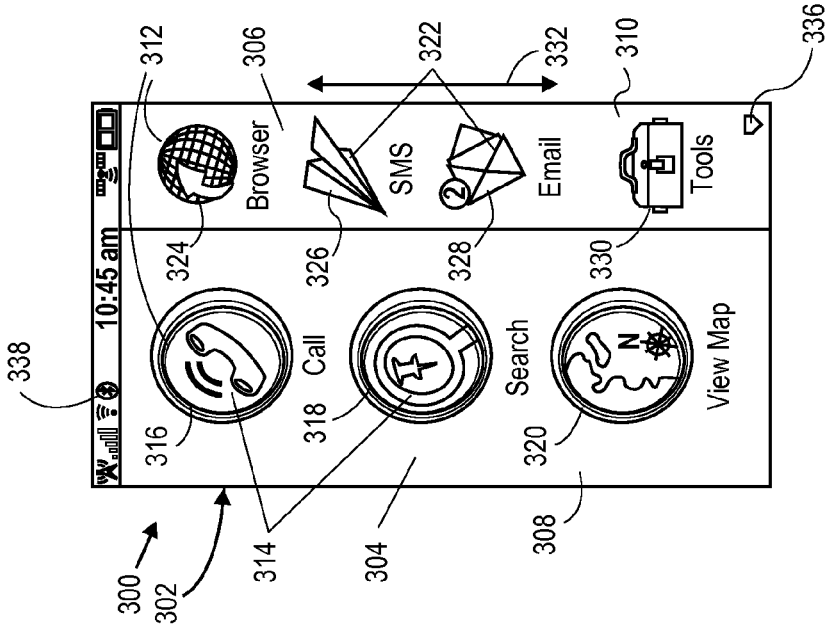
300
302
304
306
308
310
312
314
316
318
320
322
324
326
328
330
332
336
338
10:45 am
Call
Search
View Map
Browser
SMS
Email
Tools

FIG. 3