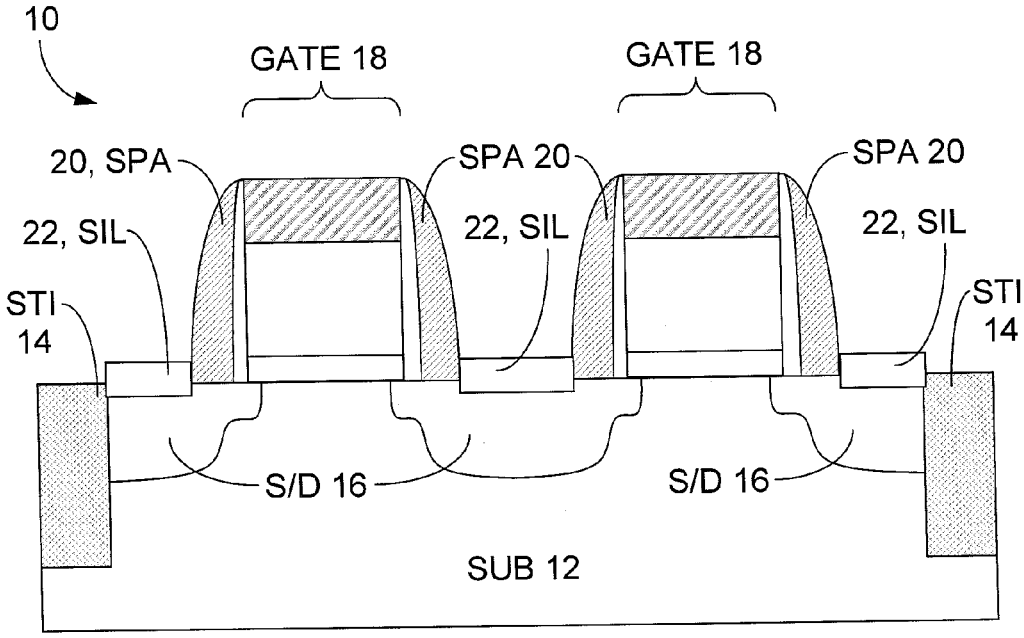
10
GATE 18
GATE 18
20, SPA
SPA 20
SPA 20
22, SIL
22, SIL
22, SIL
STI
14
STI
14
S/D 16
S/D 16
SUB 12

FIG. 1

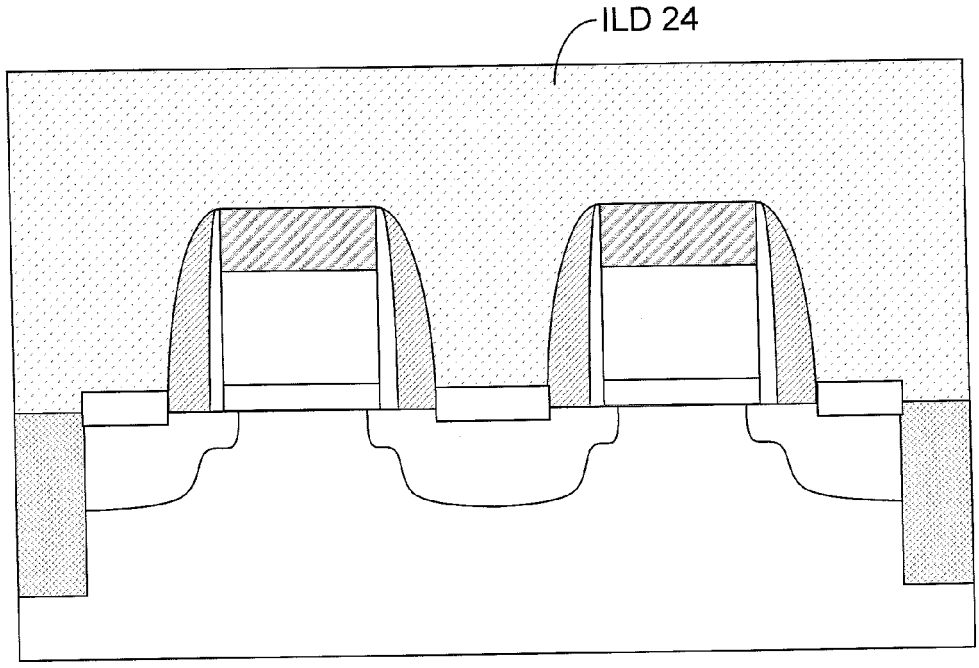
ILD 24

FIG. 2