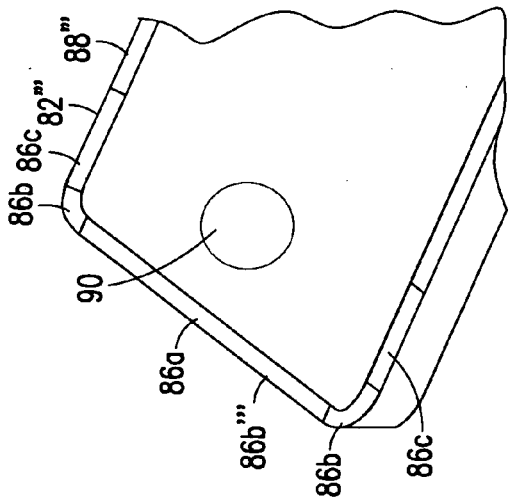
88'''
82'''
86c
86b
90
86a
86b'''
86b
86c

FIG.16

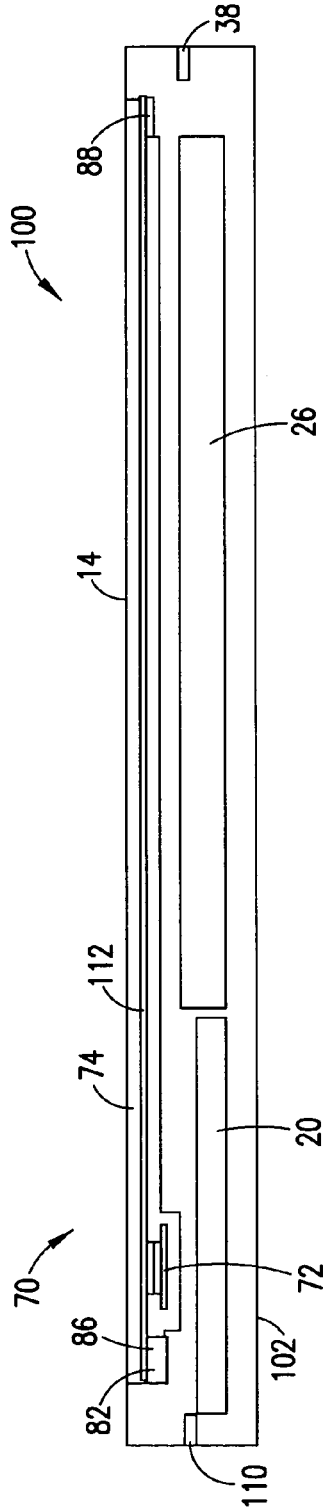
38
88
100
26
14
112
74
20
70
72
86
102
82
110

FIG.17