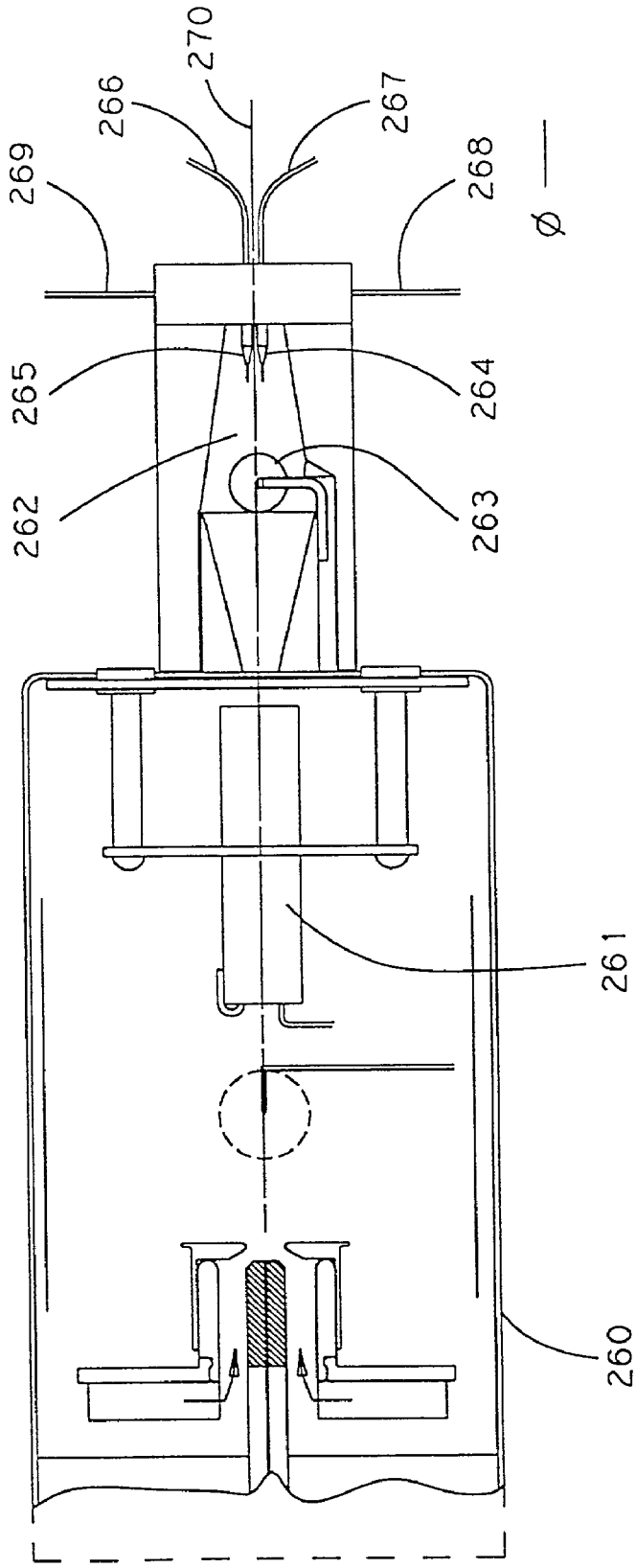

FIGURE 11