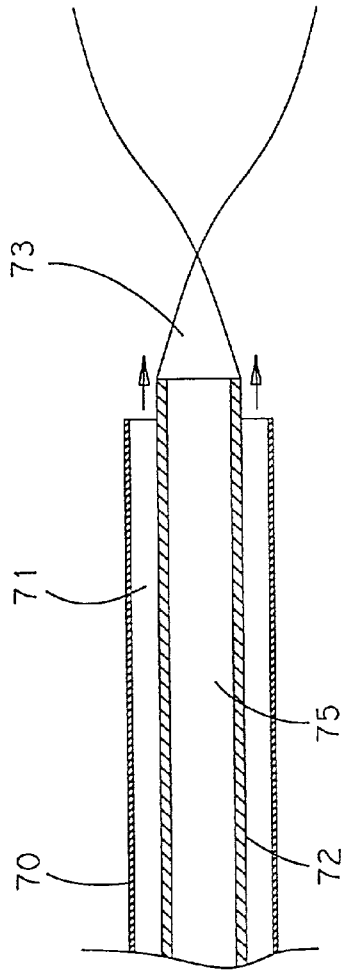

FIGURE 12

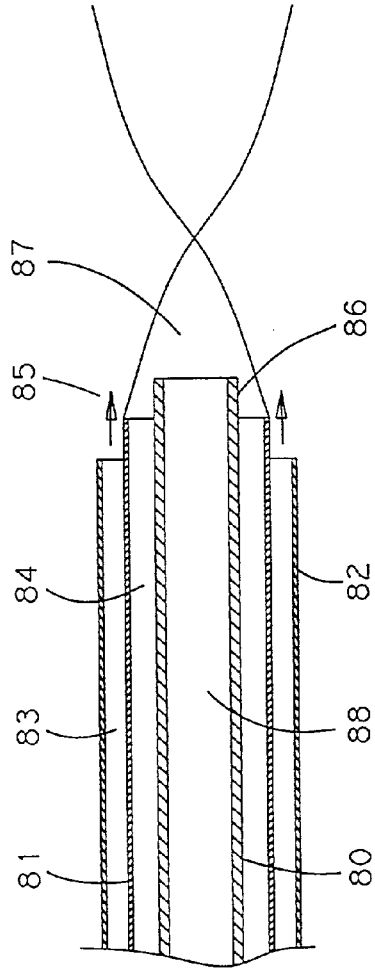

FIGURE 13