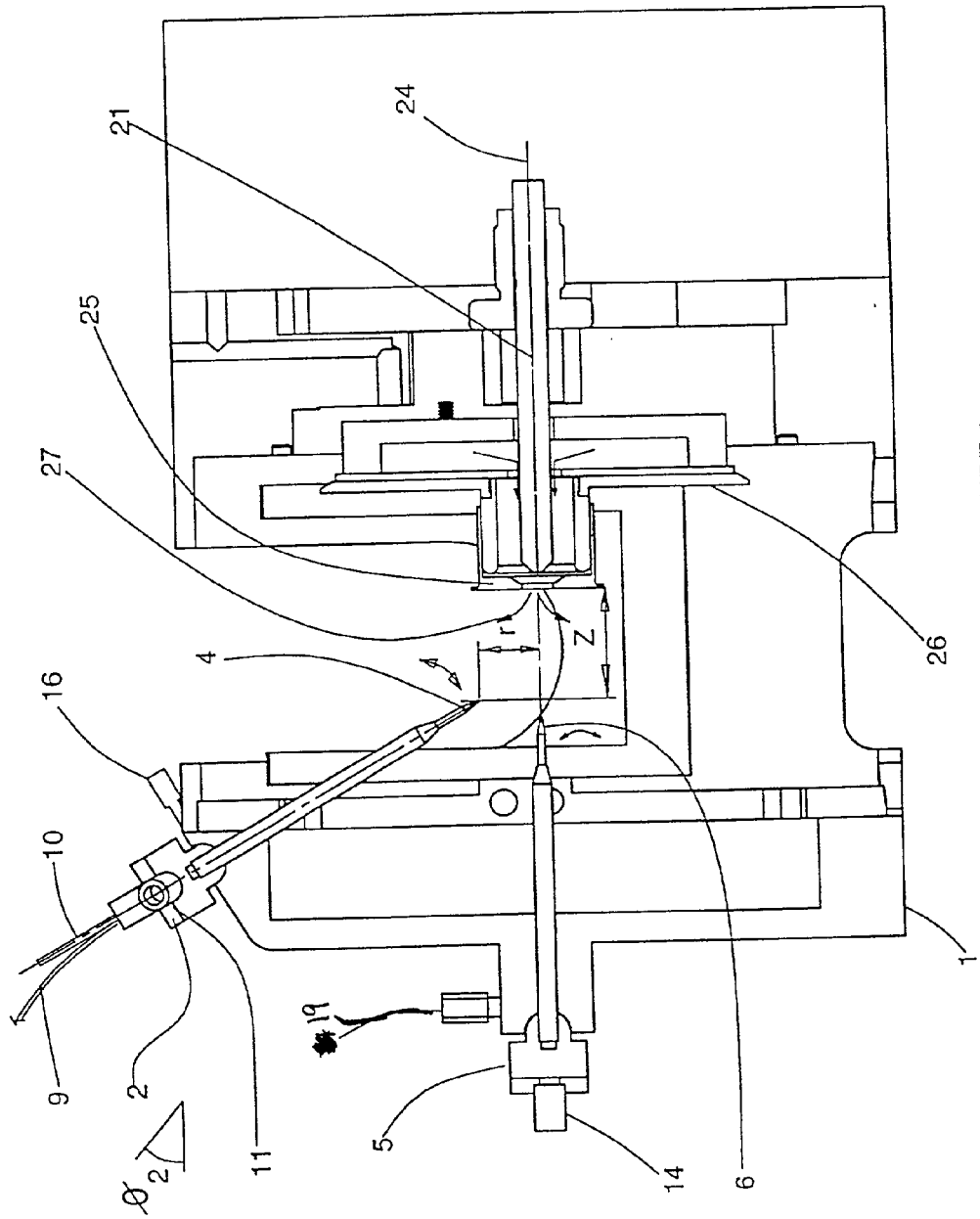

FIGURE 3