FIG. 5

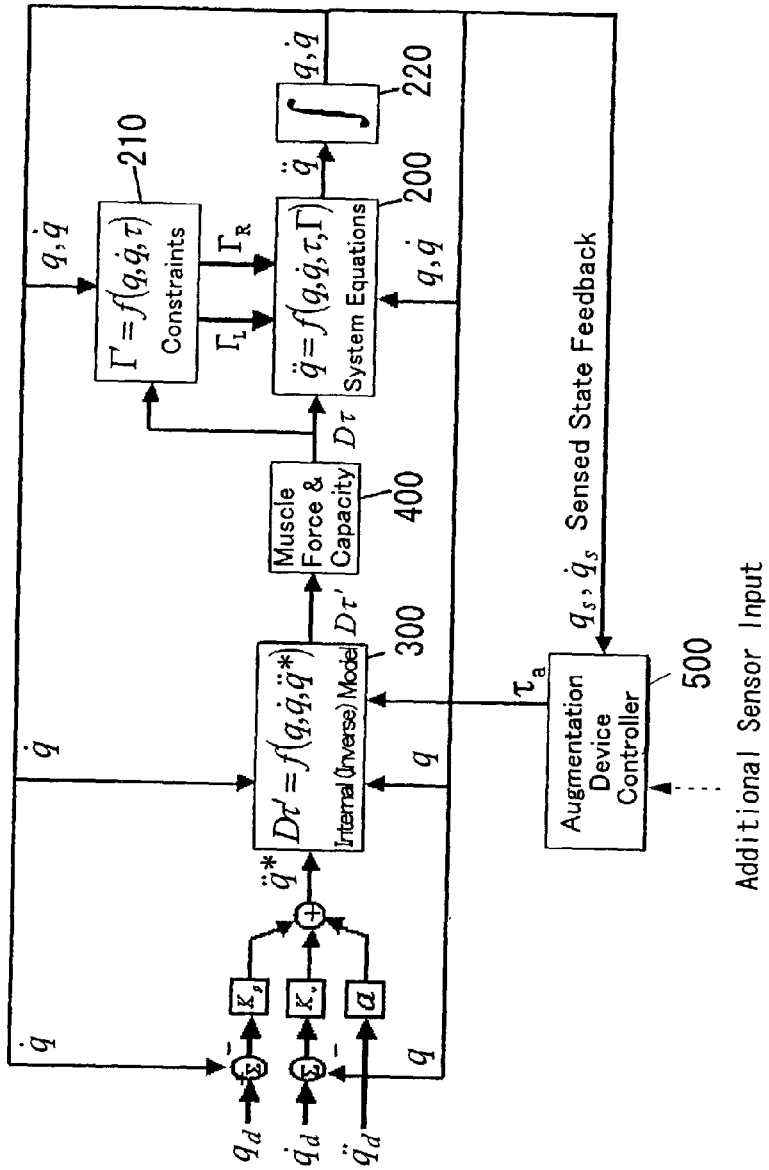
Constraints
System Equations
Internal (Inverse) Model
Muscle Force & Capacity
Augmentation Device Controller
Sensed State Feedback
Additional Sensor Input
210
200
220
300
400
500