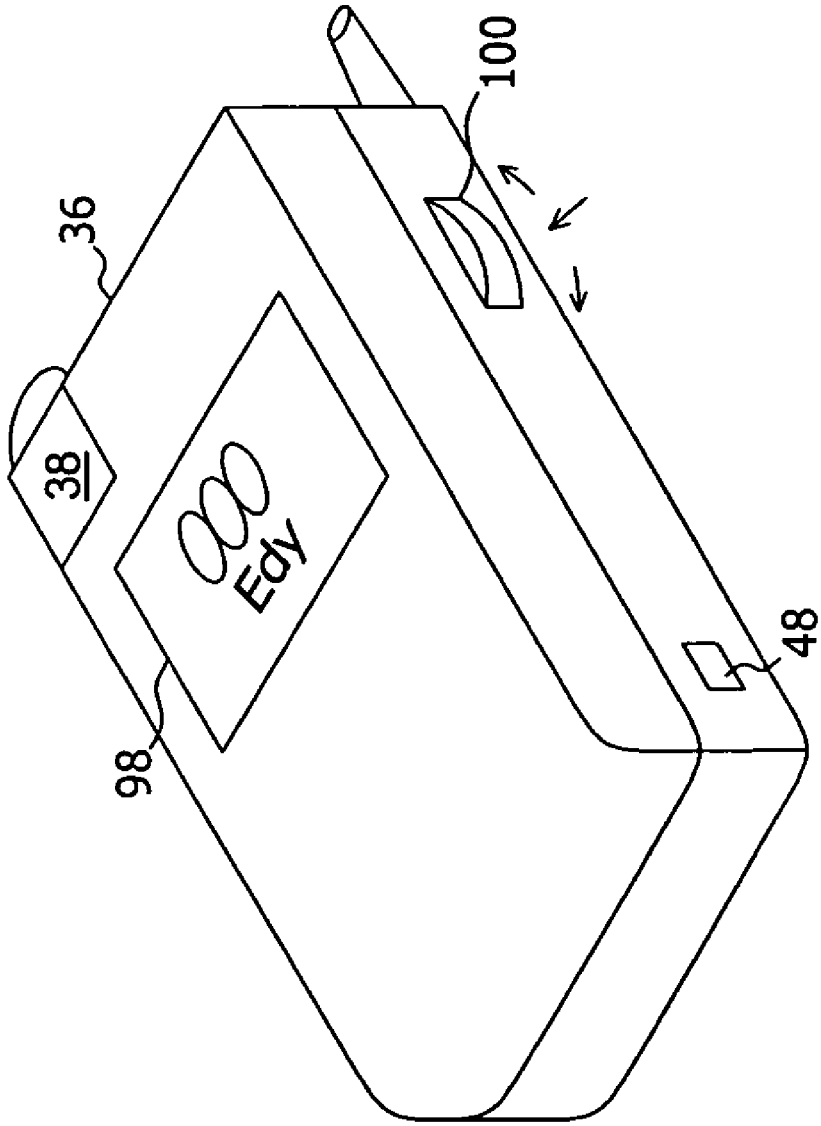


Figure 6