FIG 2C

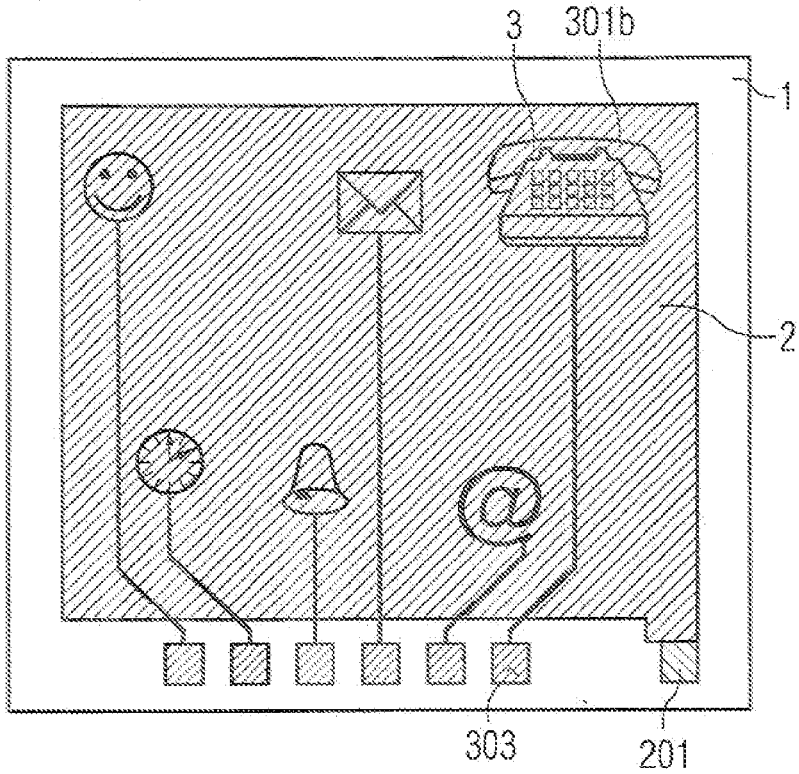
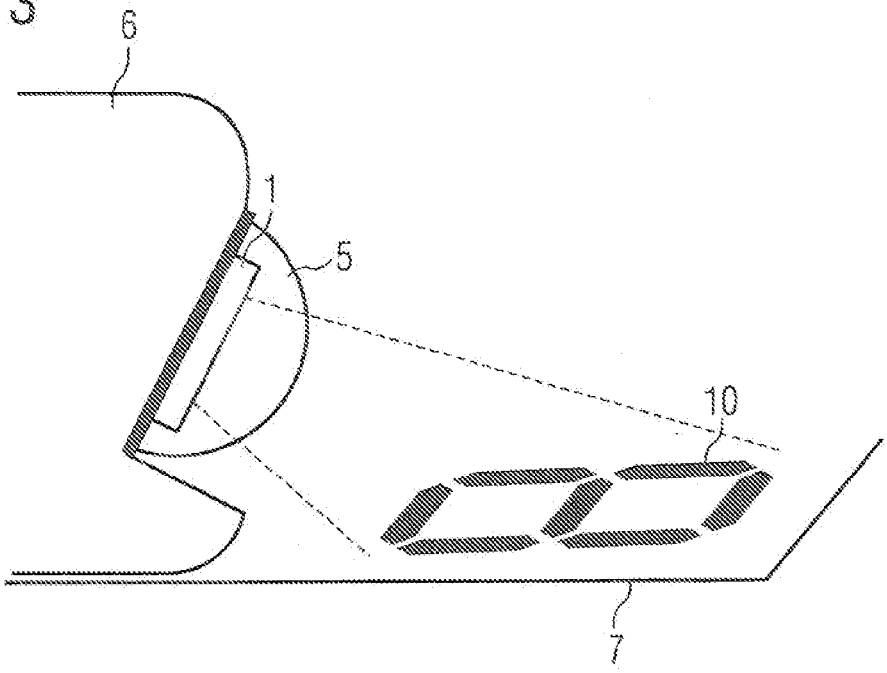
FIG 3