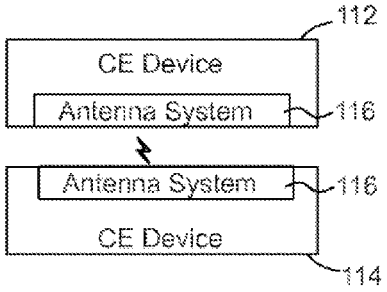
112
CE Device
Antenna System
116
Antenna System
116
CE Device
114

FIG. 1A

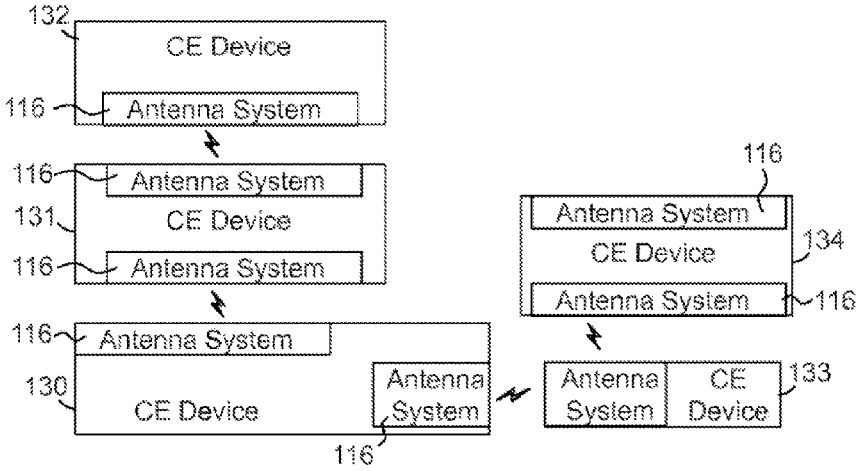
132
CE Device
116
Antenna System
116
Antenna System
131
CE Device
116
Antenna System
116
Antenna System
130
CE Device
Antenna System
116
116
Antenna System
CE Device
134
Antenna System
116
Antenna System
CE Device
133

FIG. 1B