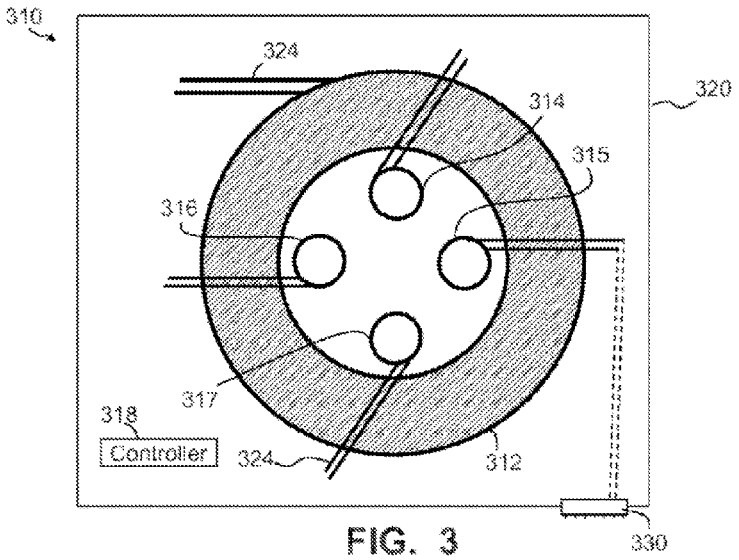
310
324
320
314
315
316
317
318
Controller
324
312
330

FIG. 3

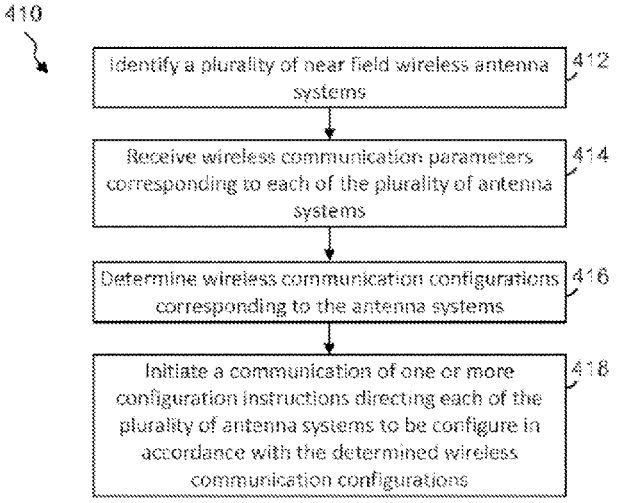
410
Identify a plurality of near field wireless antenna systems
412
Receive wireless communication parameters corresponding to each of the plurality of antenna systems
414
Determine wireless communication configurations corresponding to the antenna systems
416
Initiate a communication of one or more configuration instructions directing each of the plurality of antenna systems to be configure in accordance with the determined wireless communication configurations
418

FIG. 4