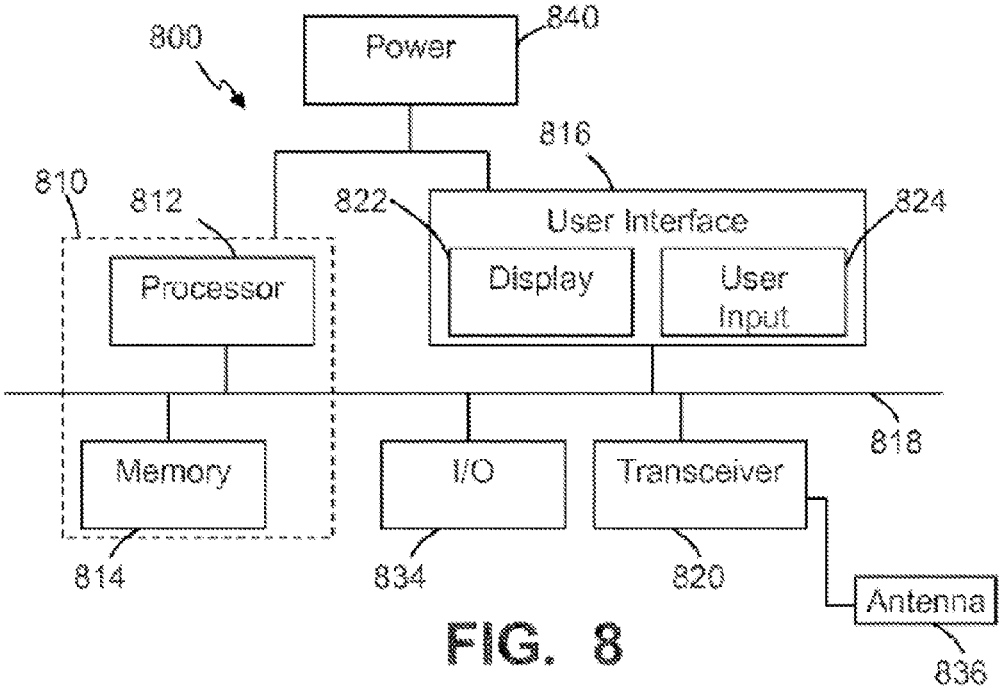
800
Power
840
816
810
812
822
User Interface
824
Processor
Display
User Input
818
Memory
I/O
Transceiver
814
834
820
Antenna
836

FIG. 8