6X4 STRAIGHT TRUCK W/ R-7/RV-3/ R-12

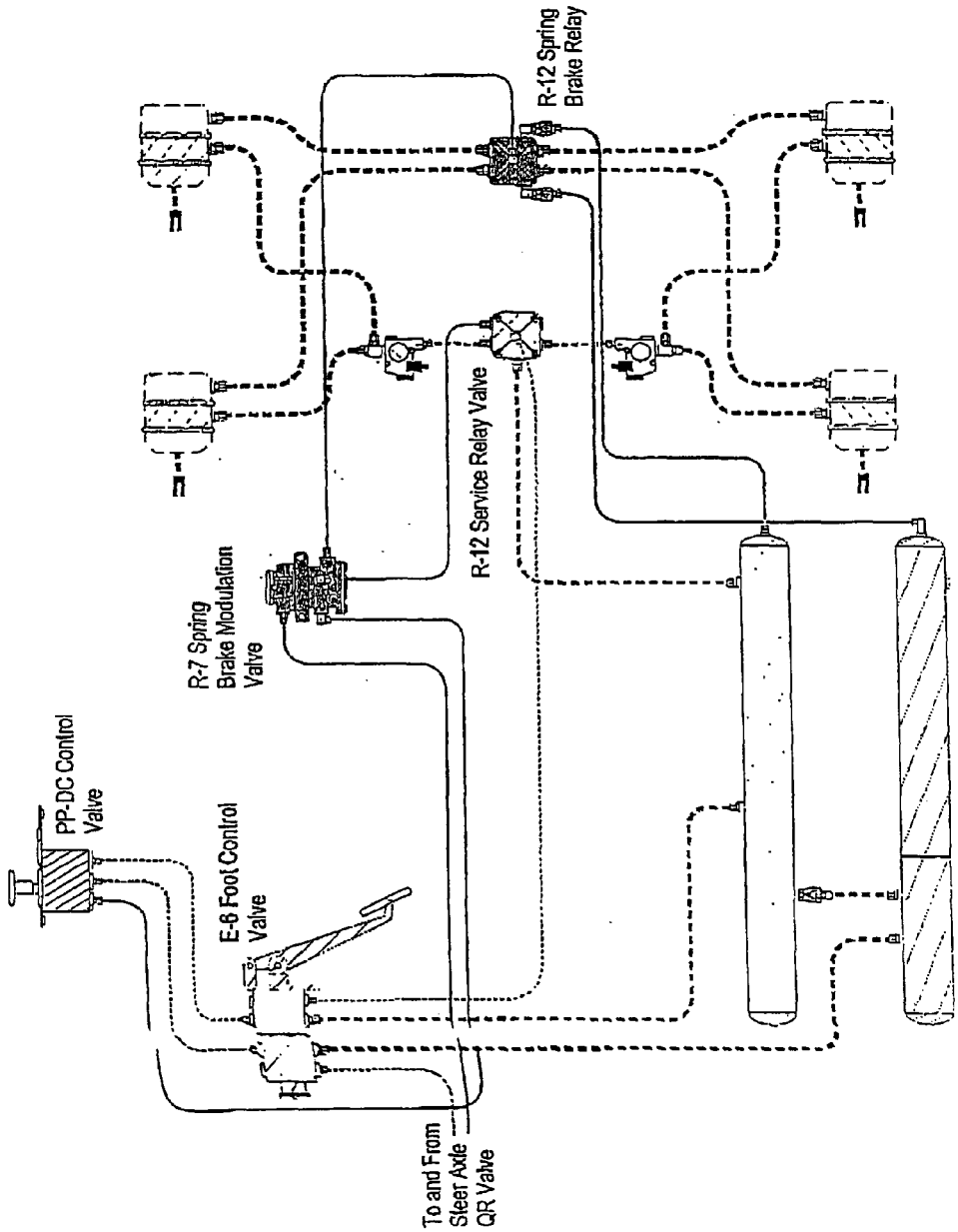

FIGURE 1

(PRIOR ART)