FIG.4

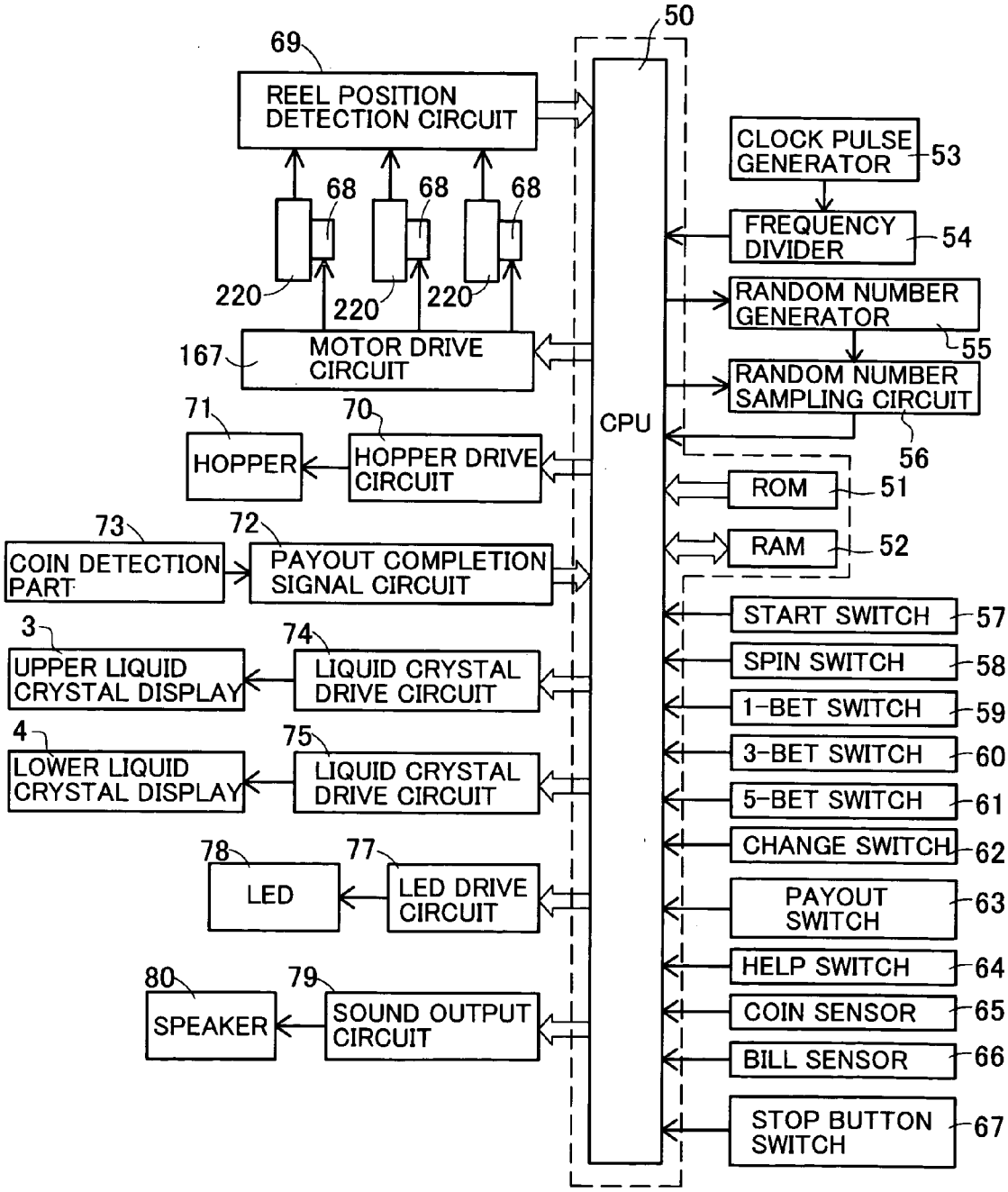
50
69
REEL POSITION DETECTION CIRCUIT
68
68
68
220
220
220
167
MOTOR DRIVE CIRCUIT
71
70
HOPPER
HOPPER DRIVE CIRCUIT
73
72
COIN DETECTION PART
PAYOUT COMPLETION SIGNAL CIRCUIT
3
74
UPPER LIQUID CRYSTAL DISPLAY
LIQUID CRYSTAL DRIVE CIRCUIT
4
75
LOWER LIQUID CRYSTAL DISPLAY
LIQUID CRYSTAL DRIVE CIRCUIT
78
77
LED
LED DRIVE CIRCUIT
80
79
SPEAKER
SOUND OUTPUT CIRCUIT
CPU
CLOCK PULSE GENERATOR
53
FREQUENCY DIVIDER
54
RANDOM NUMBER GENERATOR
55
RANDOM NUMBER SAMPLING CIRCUIT
56
ROM
51
RAM
52
START SWITCH
57
SPIN SWITCH
58
1-BET SWITCH
59
3-BET SWITCH
60
5-BET SWITCH
61
CHANGE SWITCH
62
PAYOUT SWITCH
63
HELP SWITCH
64
COIN SENSOR
65
BILL SENSOR
66
STOP BUTTON SWITCH
67