FIG.5

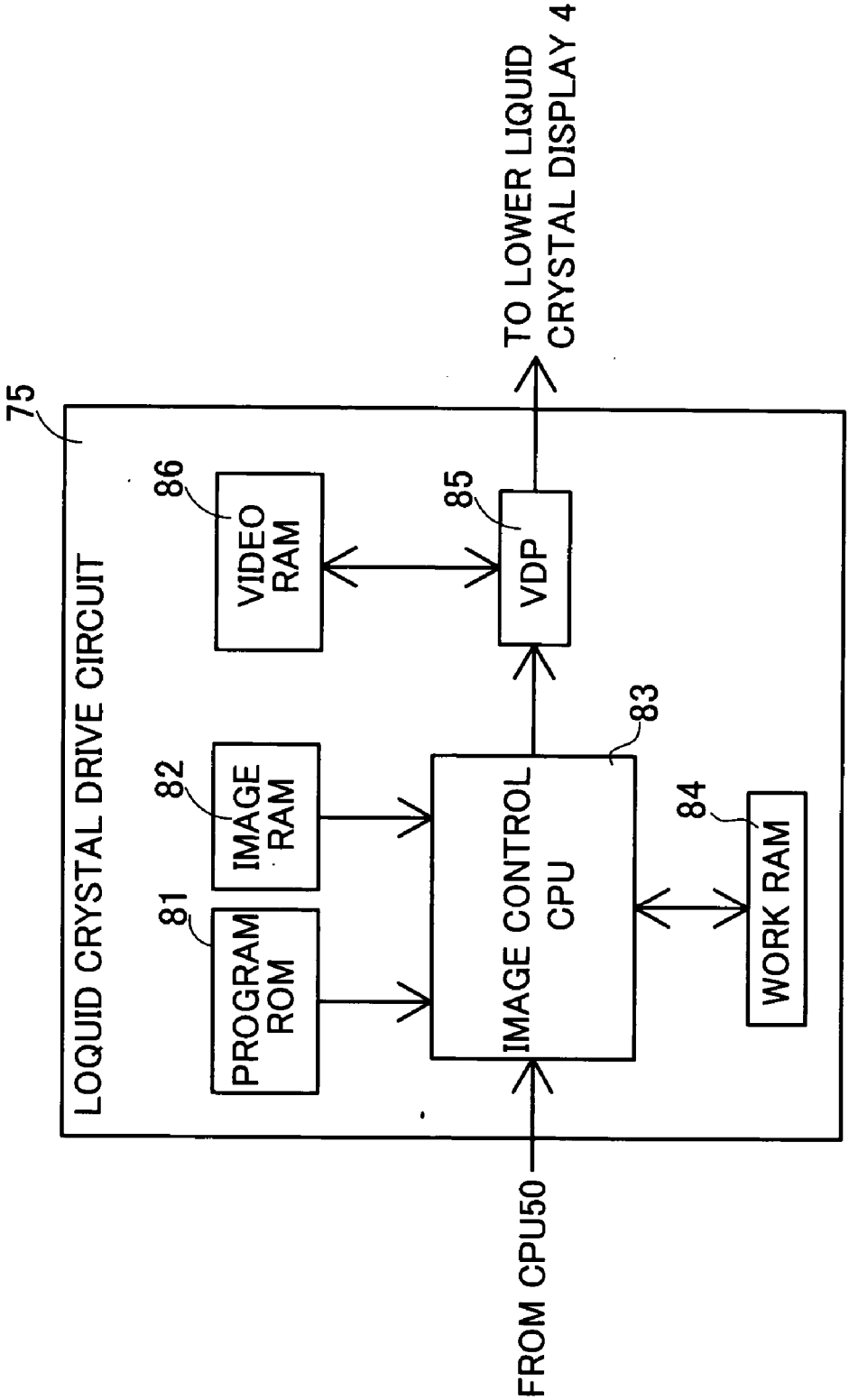
75
LOQUID CRYSTAL DRIVE CIRCUIT
81
PROGRAM ROM
82
IMAGE RAM
86
VIDEO RAM
IMAGE CONTROL CPU
83
85
VDP
84
WORK RAM
FROM CPU50
TO LOWER LIQUID CRYSTAL DISPLAY 4