Fig. 12A PRIOR ART

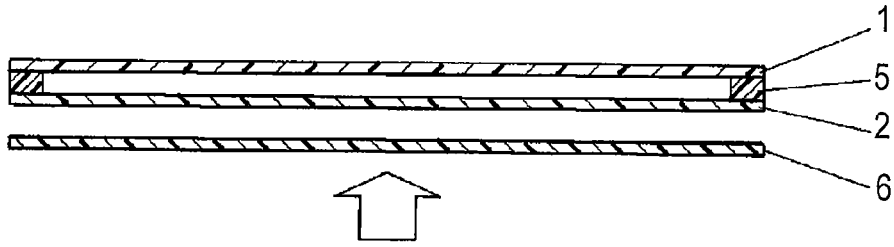

Fig. 12B PRIOR ART

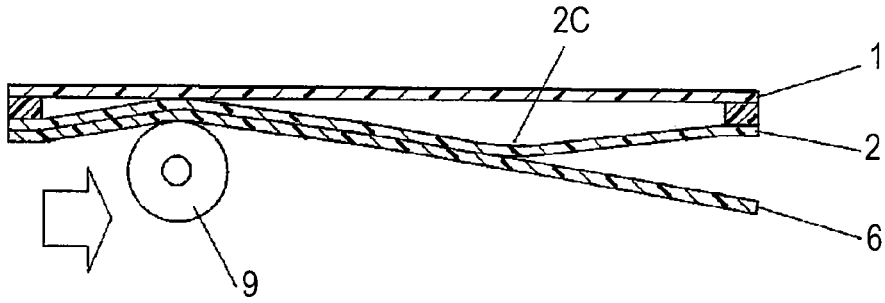
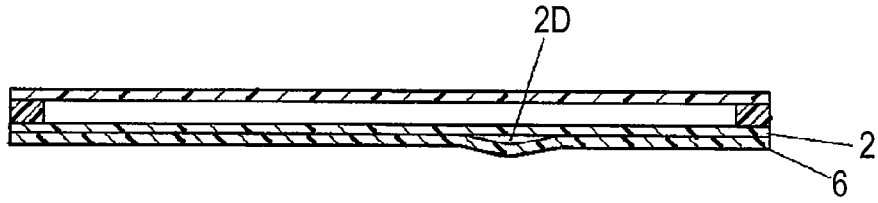
Fig. 12C PRIOR ART