US 20170031632A1

(19) United States

(12) Patent Application Publication

YUN et al.

(10) Pub. No.: US 2017/0031632 A1

(43) Pub. Date: Feb. 2, 2017

(54) **DATA STORAGE DEVICE, METHOD OF OPERATING THE SAME, AND DATA PROCESSING SYSTEM INCLUDING THE SAME**

(71) Applicant: **SAMSUNG ELECTRONICS CO., LTD.**, Suwon-si (KR)

(72) Inventors: **Hyun Sik YUN**, Hwaseong-si (KR); **Sang Yoon OH**, Suwon-si (KR); **Myung Jin JUNG**, Yongin-si (KR); **Hyun Jin CHOI**, Suwon-si (KR)

(73) Assignee: **SAMSUNG ELECTRONICS CO., LTD.**, Suwon-si (KR)

(21) Appl. No.: **15/201,761**

(22) Filed: **Jul. 5, 2016**

(30) **Foreign Application Priority Data**

Jul. 28, 2015 (KR) 10-2015-0106733

Publication Classification

(51) **Int. Cl.**

G06F 3/06	(2006.01)
G11C 16/26	(2006.01)
G06F 12/1009	(2006.01)
G11C 16/10	(2006.01)

(52) **U.S. Cl.**

CPC ***G06F 3/0659*** (2013.01); ***G11C 16/10*** (2013.01); ***G11C 16/26*** (2013.01); ***G06F 12/1009*** (2013.01); ***G06F 3/0619*** (2013.01); ***G06F 3/0685*** (2013.01); *G06F 2212/7201* (2013.01)

(57) **ABSTRACT**
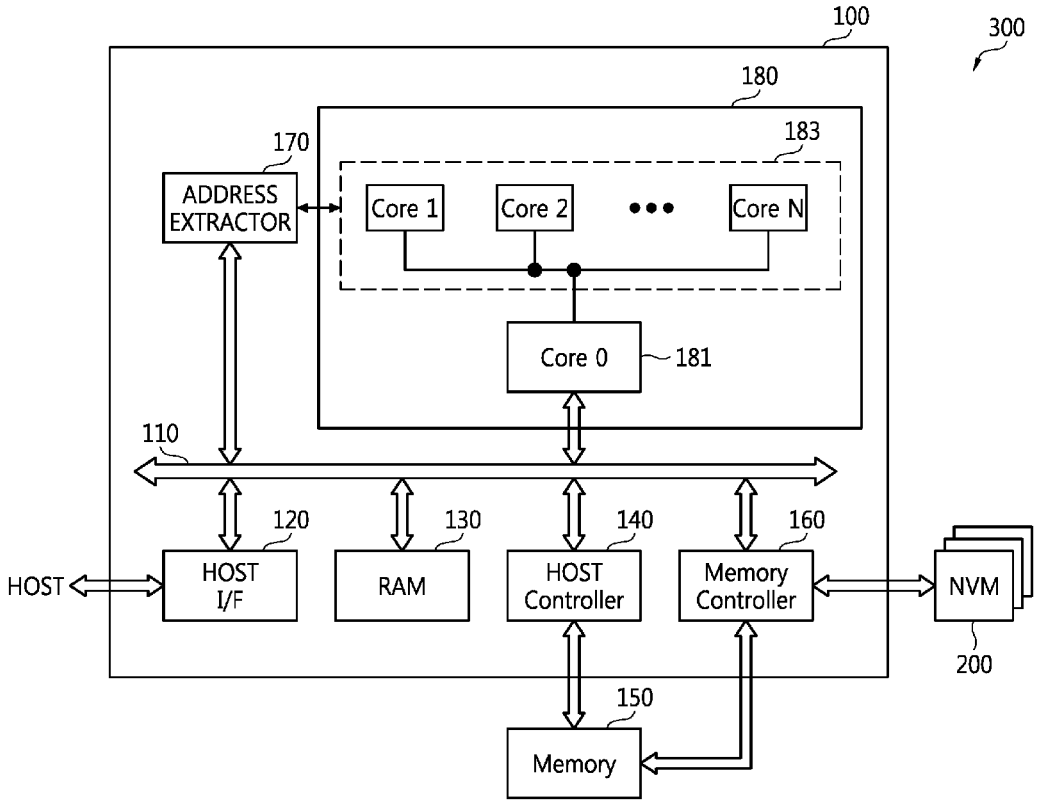
A data storage device includes a non-volatile memory device and a controller configured to receive a command from a host and to control an operation of the non-volatile memory device based on the command. The controller includes a processor configured to receive and process the command and an address extractor configured to extract address information from the command and to output the address information to the processor before the processor processes the command.