FIG. 1

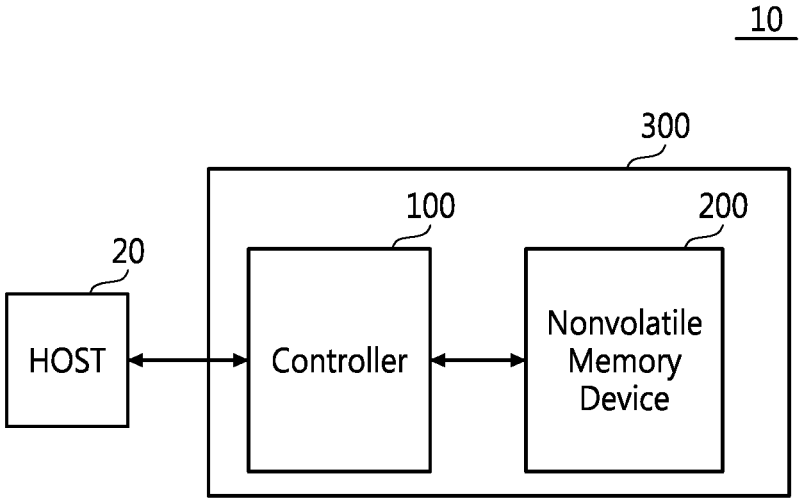
10
300
100
200
20
HOST
Controller
Nonvolatile
Memory
Device