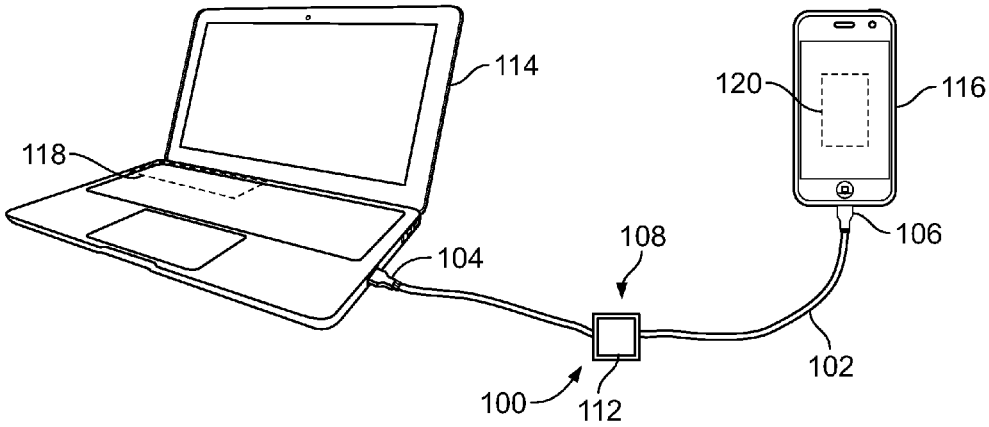
114
120
116
118
108
106
104
102
100
112

FIG. 2

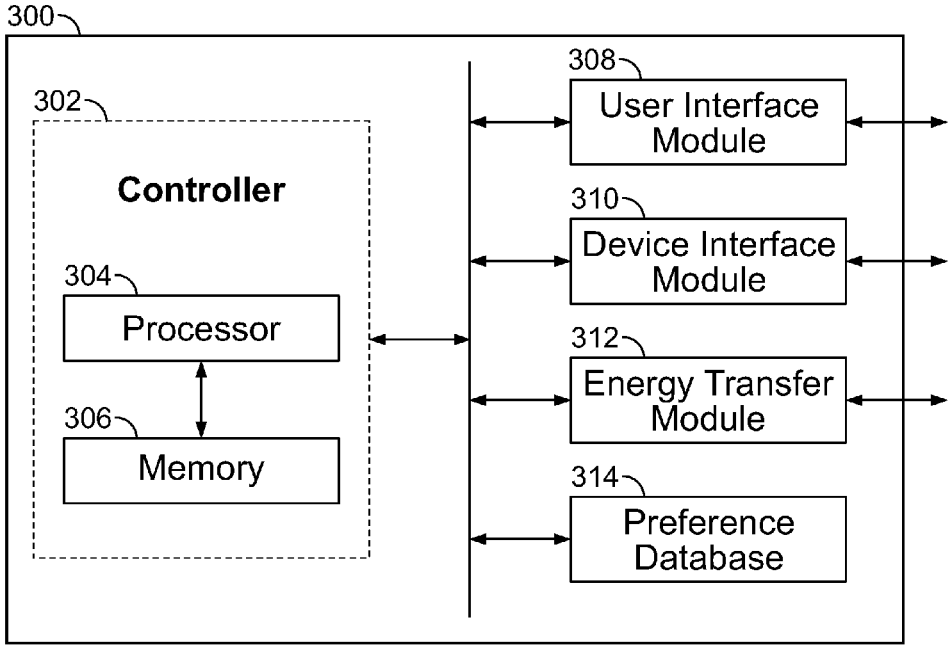
300
302
Controller
304
Processor
306
Memory
308
User Interface Module
310
Device Interface Module
312
Energy Transfer Module
314
Preference Database

FIG. 3