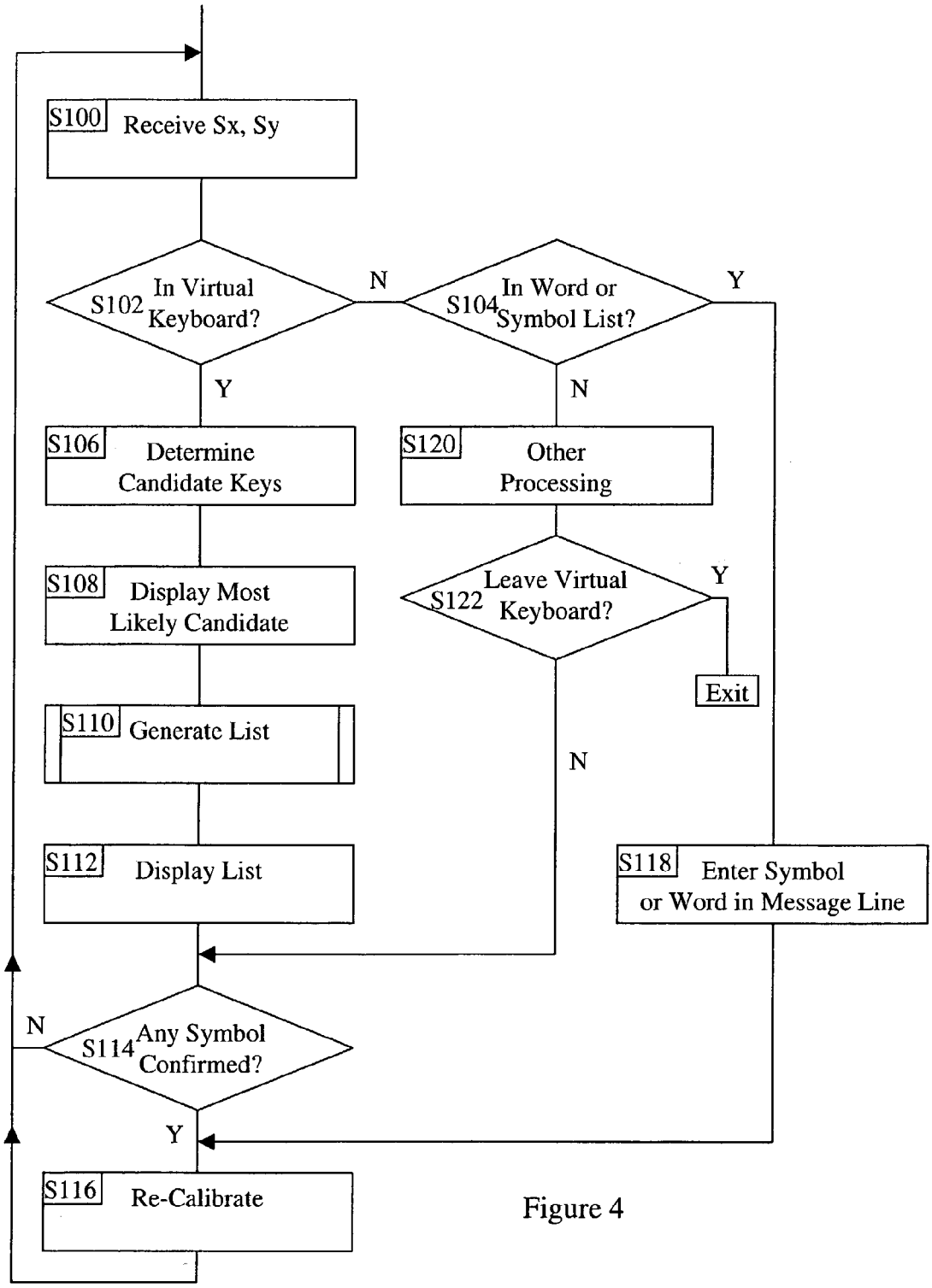
S100
Receive Sx, Sy
S102
In Virtual Keyboard?
N
S104
In Word or Symbol List?
Y
Y
N
S106
Determine Candidate Keys
S120
Other Processing
S108
Display Most Likely Candidate
S122
Leave Virtual Keyboard?
Y
Exit
S110
Generate List
N
S112
Display List
S118
Enter Symbol or Word in Message Line
N
S114
Any Symbol Confirmed?
Y
S116
Re-Calibrate

Figure 4