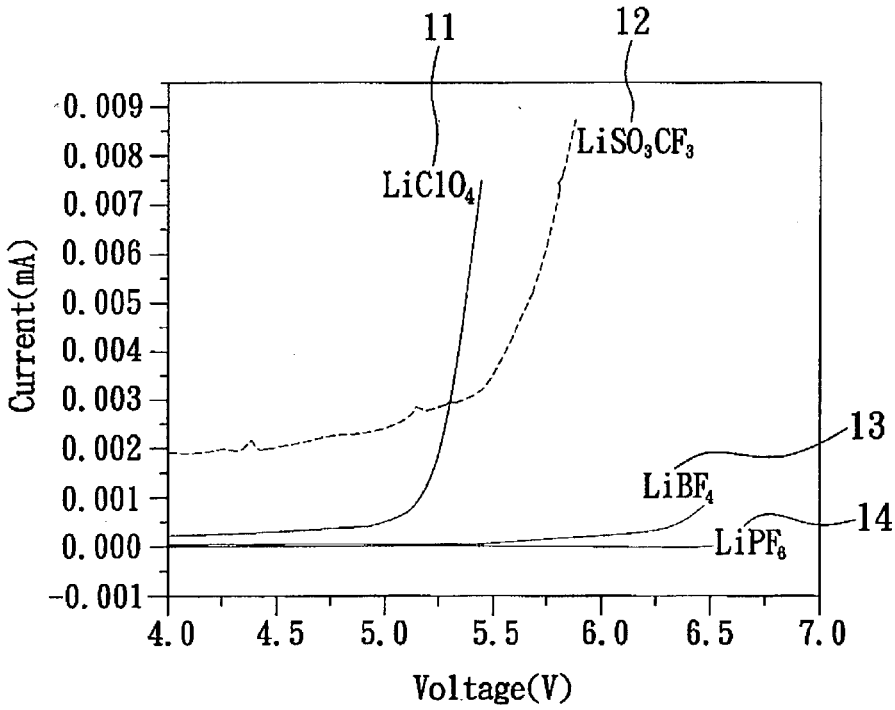
11
12
13
14
LiClO4
LiSO3CF3
LiBF4
LiPF6
Current(mA)
0.009
0.008
0.007
0.006
0.005
0.004
0.003
0.002
0.001
0.000
-0.001
4.0
4.5
5.0
5.5
6.0
6.5
7.0
Voltage(V)

Fig. 1

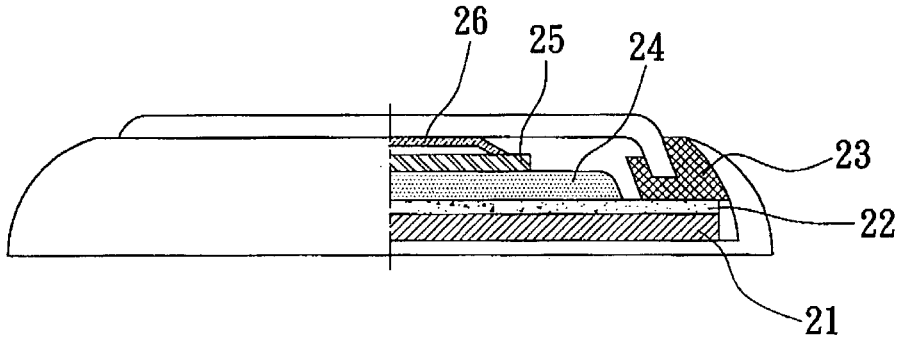
26
25
24
23
22
21

Fig. 2