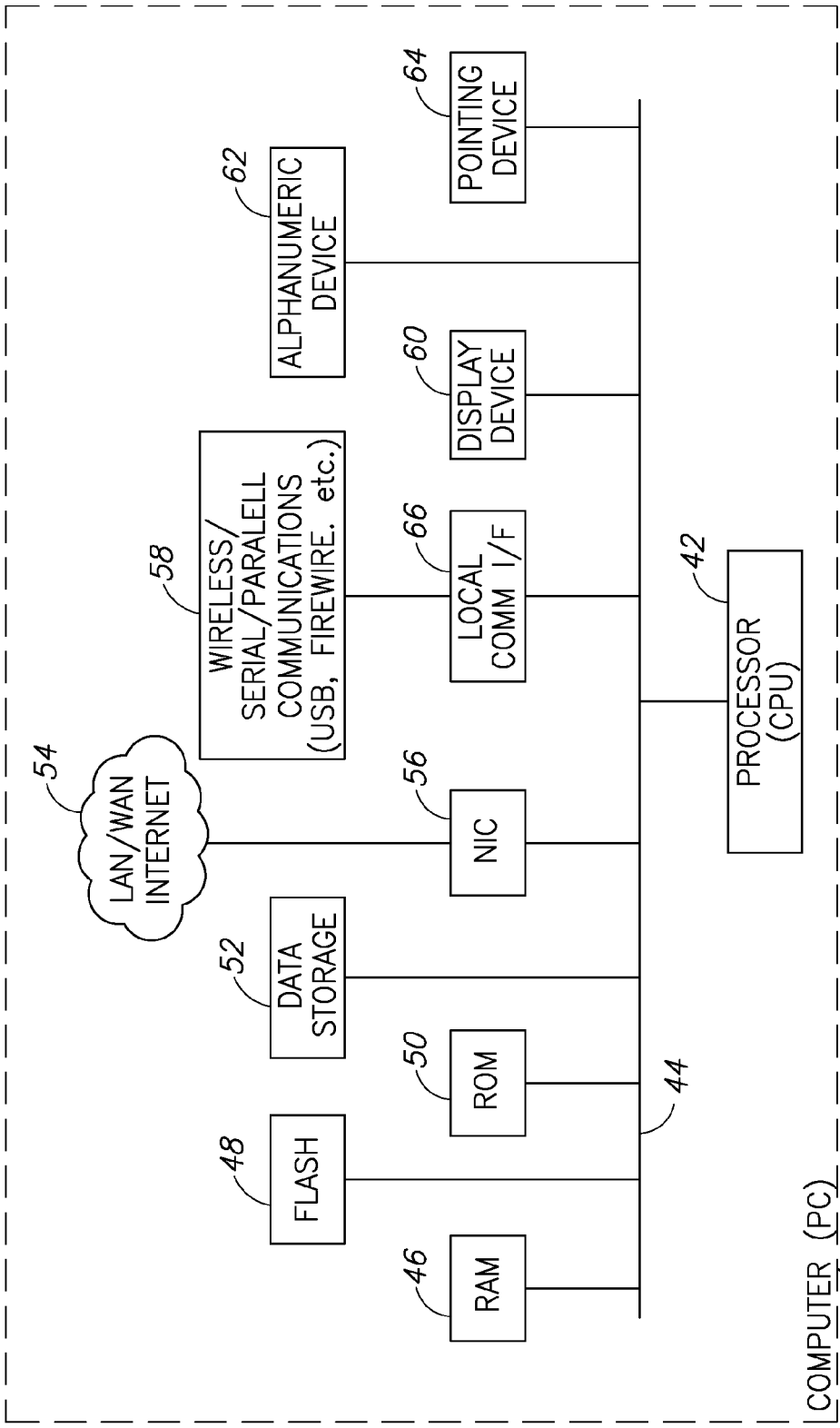
COMPUTER (PC)
40
44
RAM
46
FLASH
48
ROM
50
DATA STORAGE
52
LAN/WAN INTERNET
54
NIC
56
WIRELESS/ SERIAL/PARALELL COMMUNICATIONS (USB, FIREWIRE. etc.)
58
LOCAL COMM I/F
66
ALPHANUMERIC DEVICE
62
DISPLAY DEVICE
60
POINTING DEVICE
64
PROCESSOR (CPU)
42

FIG.2