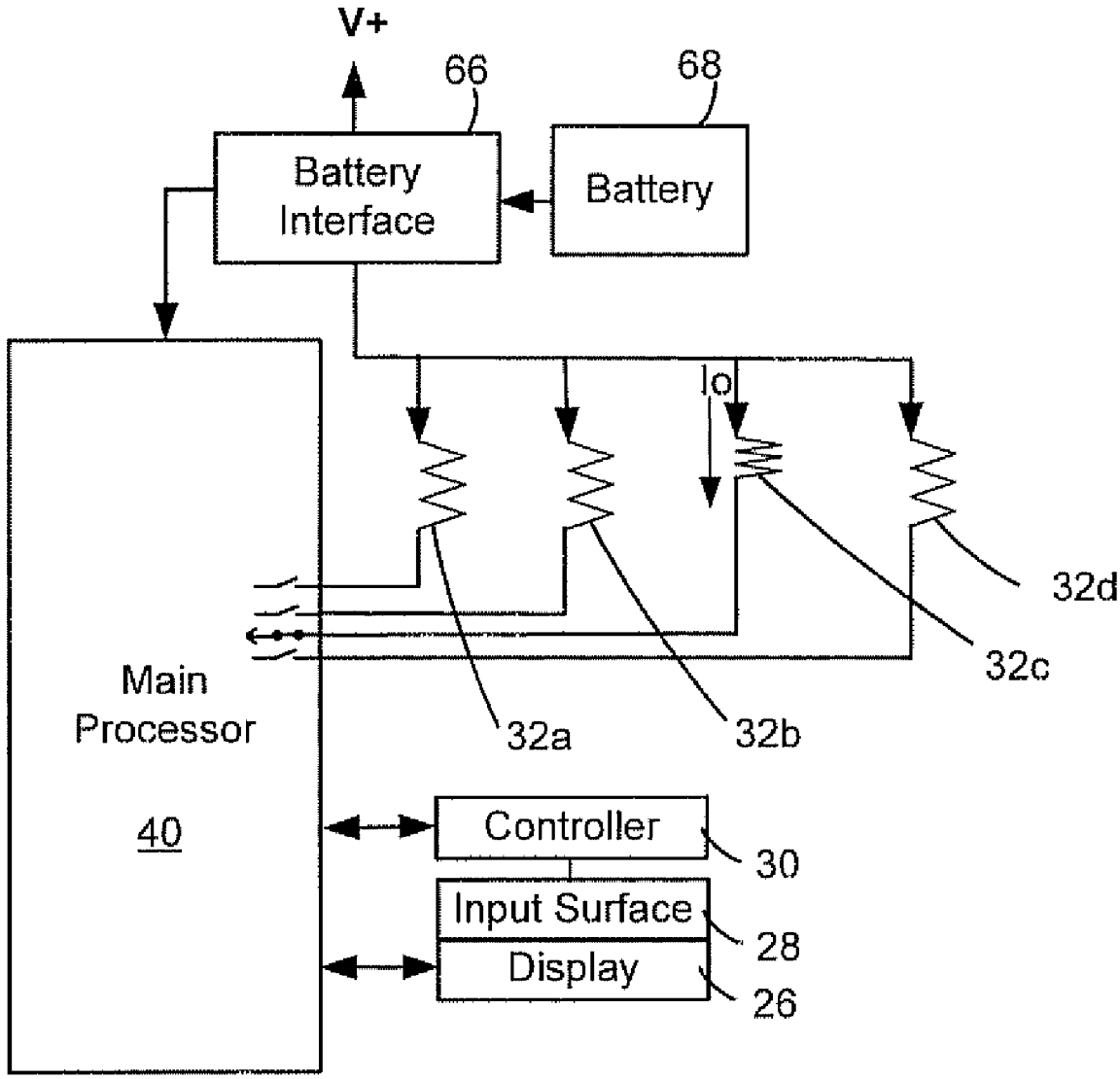
V+
66
68
Battery Interface
Battery
Io
32d
32c
32a
32b
Main Processor
40
Controller
30
Input Surface
28
Display
26

Figure 4A