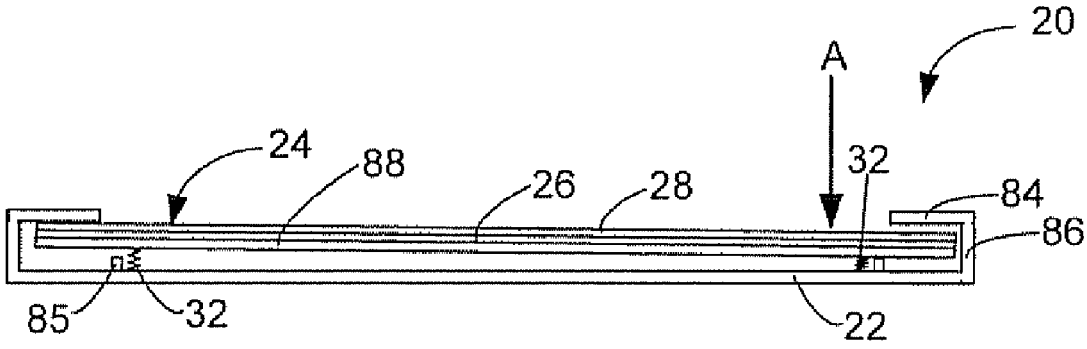

Figure 6

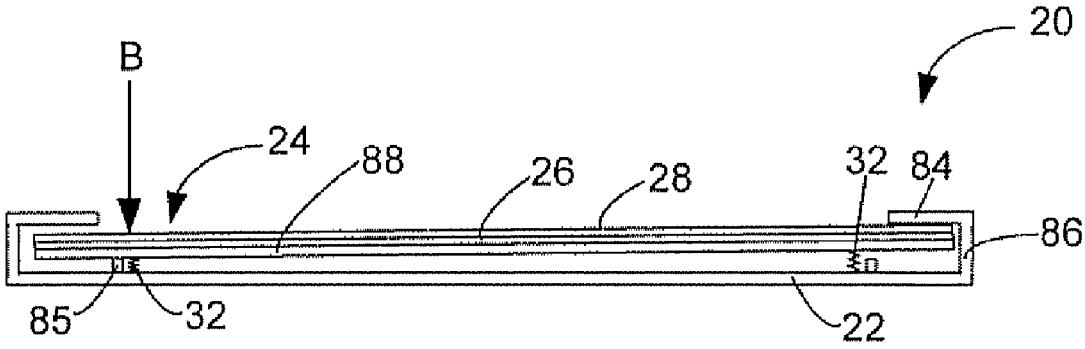

Figure 7

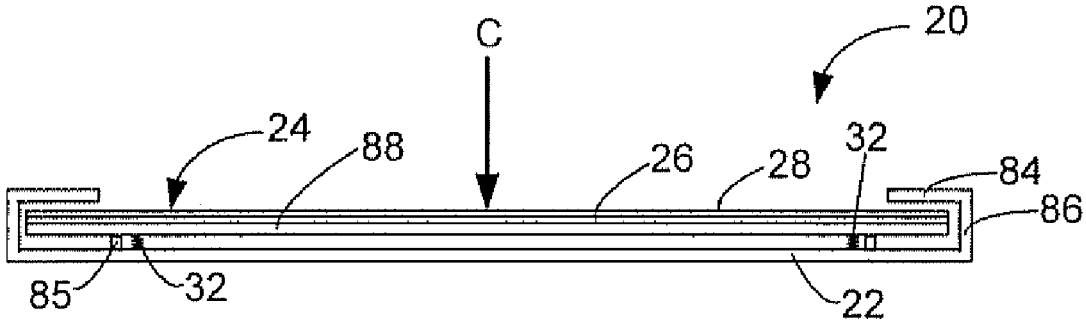

Figure 8