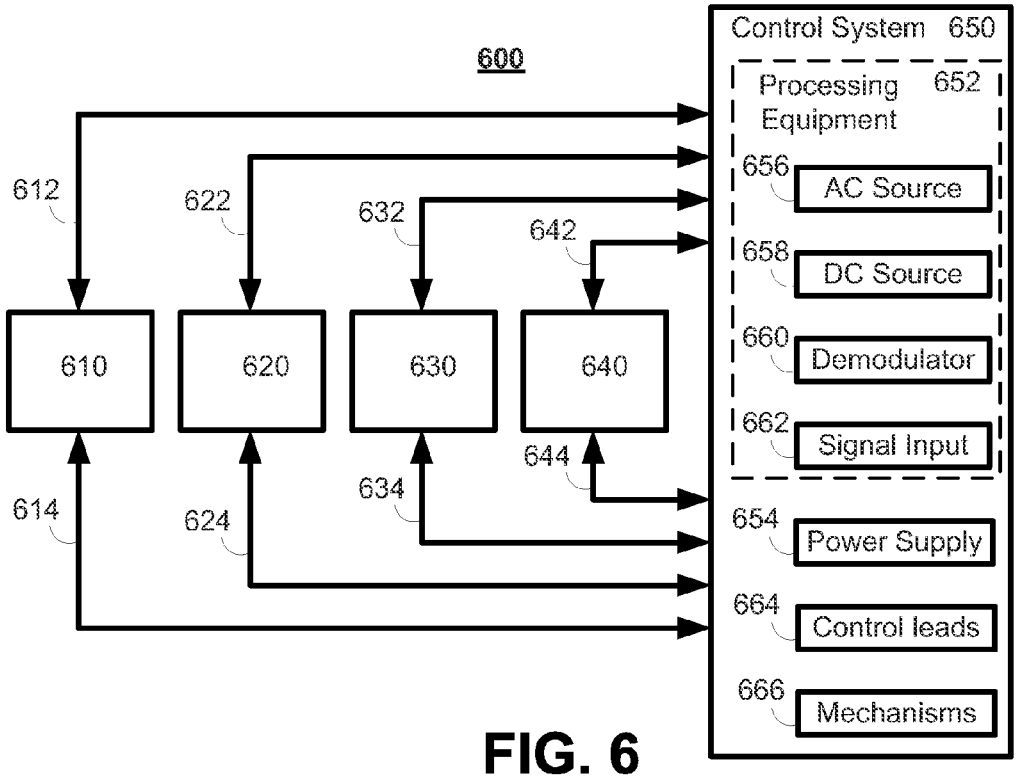
600
Control System 650
Processing Equipment 652
656
AC Source
658
DC Source
660
Demodulator
662
Signal Input
654
Power Supply
664
Control leads
666
Mechanisms
612
622
632
642
610
620
630
640
614
624
634
644

FIG. 6

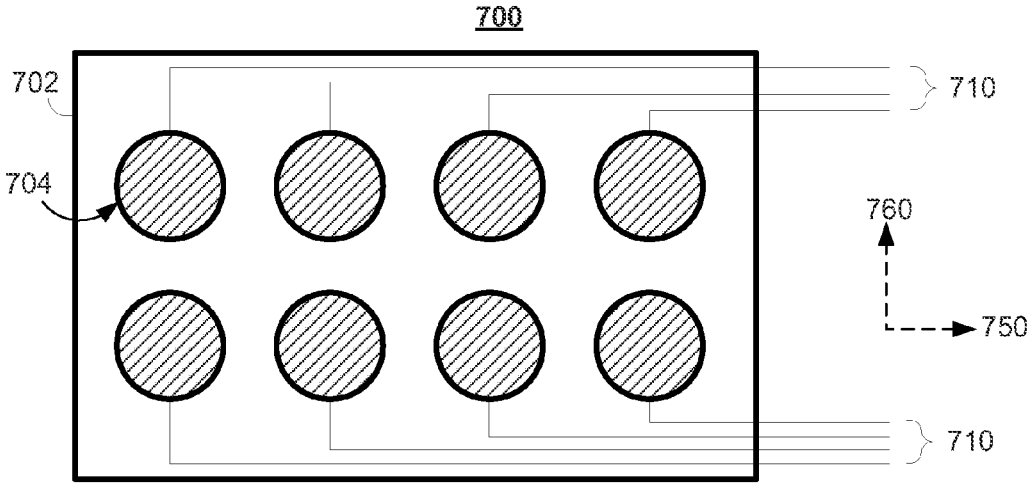
700
702
704
710
760
750
710

FIG. 7