Figure 2a

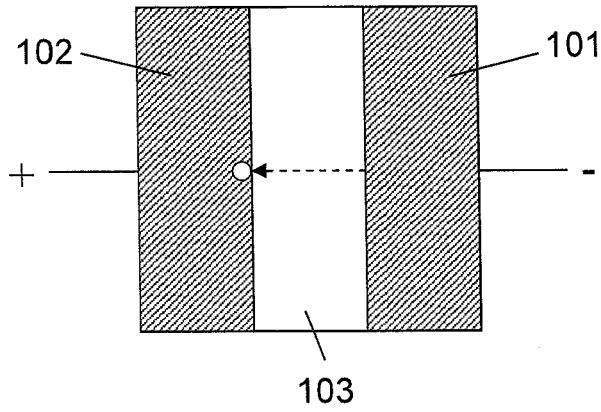
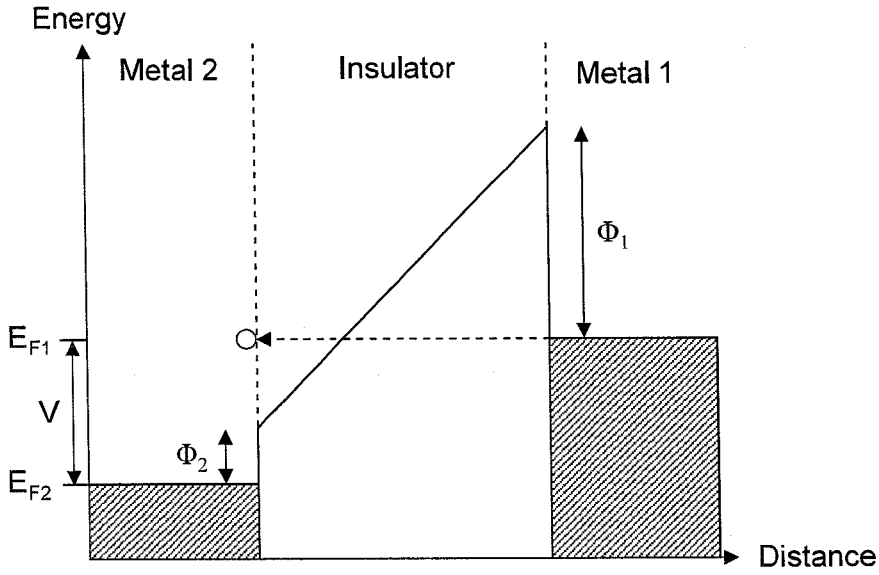
Figure 2b