FIG. 1

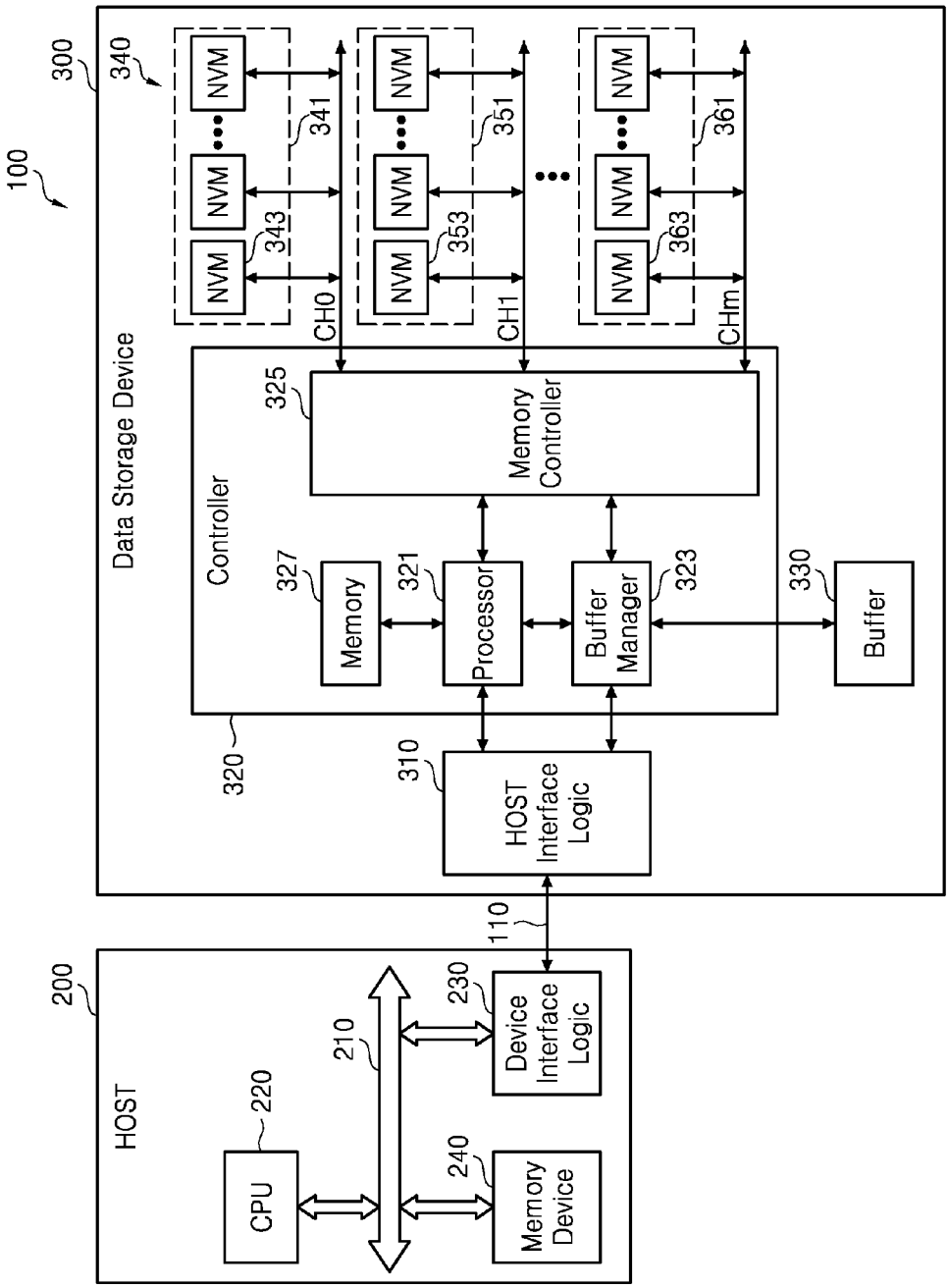
100
300
Data Storage Device
340
NVM
343
341
CH0
351
353
CH1
361
363
CHm
Controller
325
Memory Controller
327
Memory
321
Processor
Buffer Manager
323
330
Buffer
320
310
HOST Interface Logic
110
200
HOST
CPU
220
210
230
Device Interface Logic
240
Memory Device