US 20020137234A1

(19) United States

(12) Patent Application Publication

(10) Pub. No.: US 2002/0137234 A1

(43) Pub. Date: Sep. 26, 2002

Wohlstadter et al.

(54) ASSAY SONICATION APPARATUS AND METHODOLOGY

(75) Inventors: **Jacob N. Wohlstadter**, Rockville, MD (US); **James Wilbur**, Germantown, MD (US); **George Sigal**, Rockville, MD (US); **Mark Martin**, Rockville, MD (US); **Alan Fischer**, Cambridge, MA (US); **Larry R. Helms**, Germantown, MD (US); **Ramin Darvari**, Waltham, MA (US)

Correspondence Address:
Attention of: Barry Evans, Esq.
Kramer Levin Naftalis & Frankel LLP
919 Third Avenue
New York, NY 10022-3902 (US)

(73) Assignee: **MESO SCALE TECHNOLOGIES, LLC.**

(21) Appl. No.: **10/152,234**

(22) Filed: **May 21, 2002**

Related U.S. Application Data

(62) Division of application No. 08/932,985, filed on Sep. 18, 1997, now Pat. No. 6,413,783.

Publication Classification

(51) **Int. Cl.**[7] **C12M 1/34**; G01N 33/557; G01N 33/542

(52) **U.S. Cl.** **436/537**; 435/287.2

(57) **ABSTRACT**
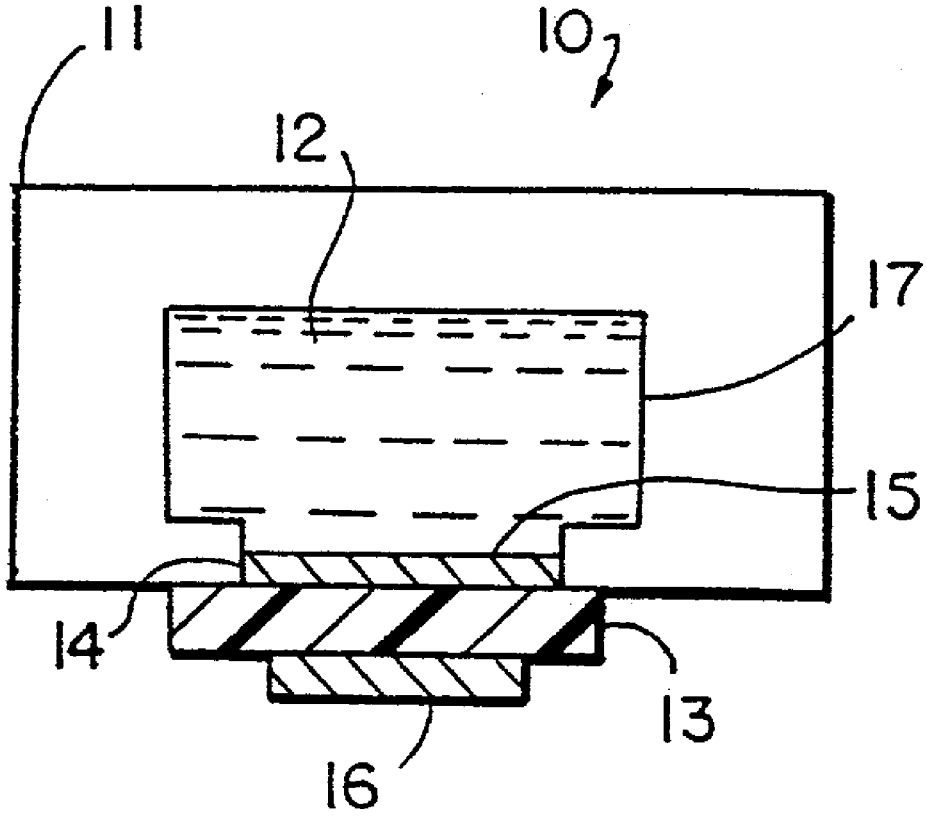
An assay apparatus includes a cell with a working electrode and a sonicating device structurally coupled to the cell for sonication the contents of the cell.