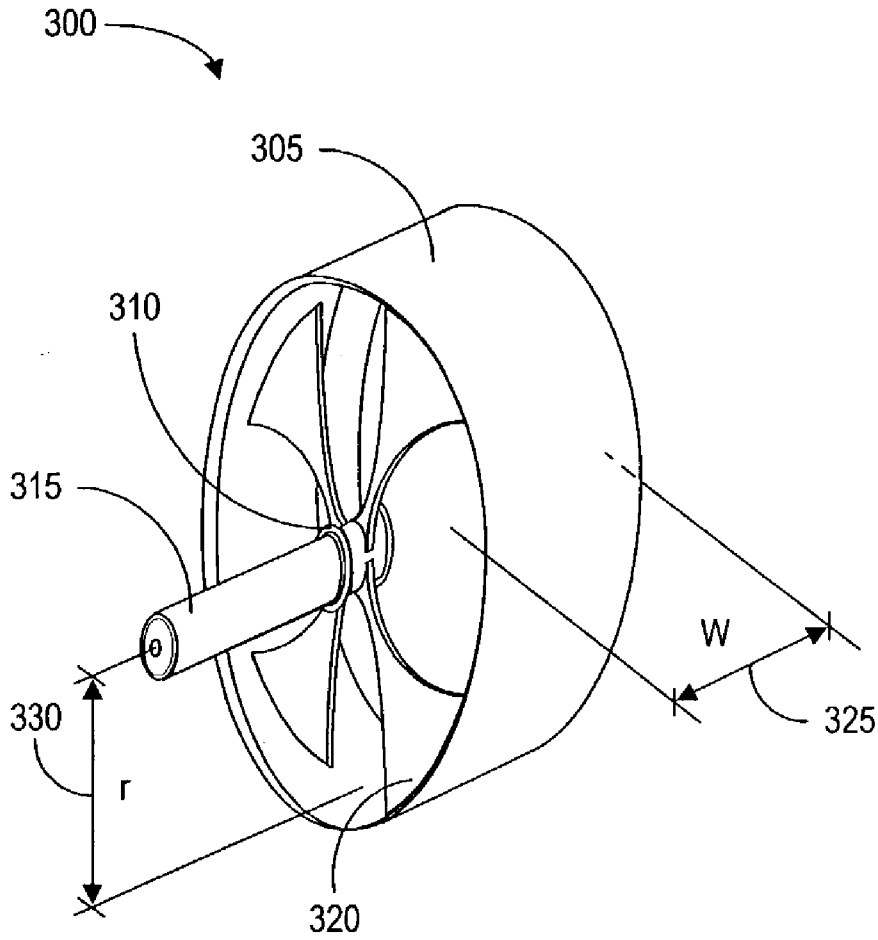

FIG. 3A

PRIOR ART