Energy Harvesting for Self-powered Sporting Goods:
Bicycles

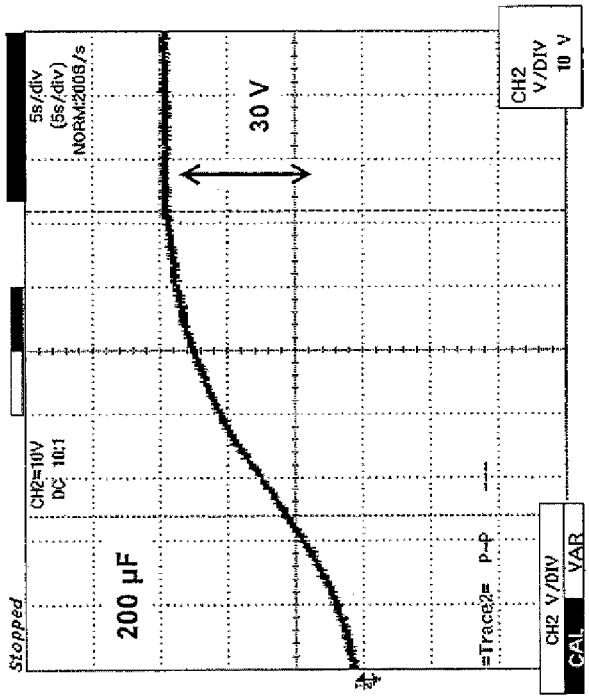

Fig. 16B

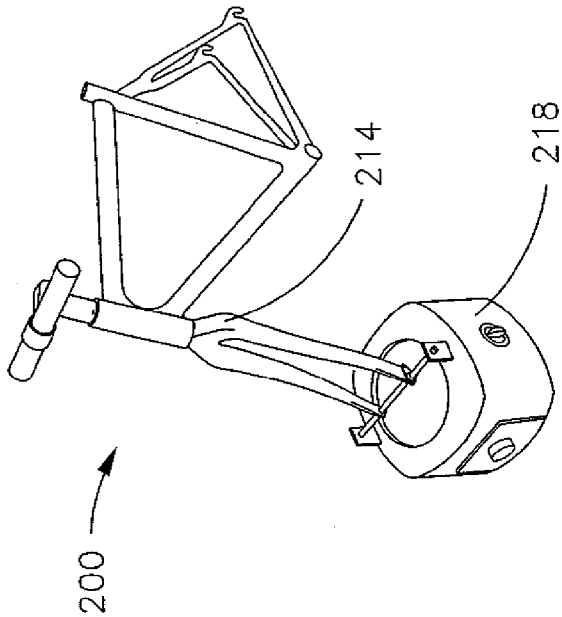

Fig. 16A