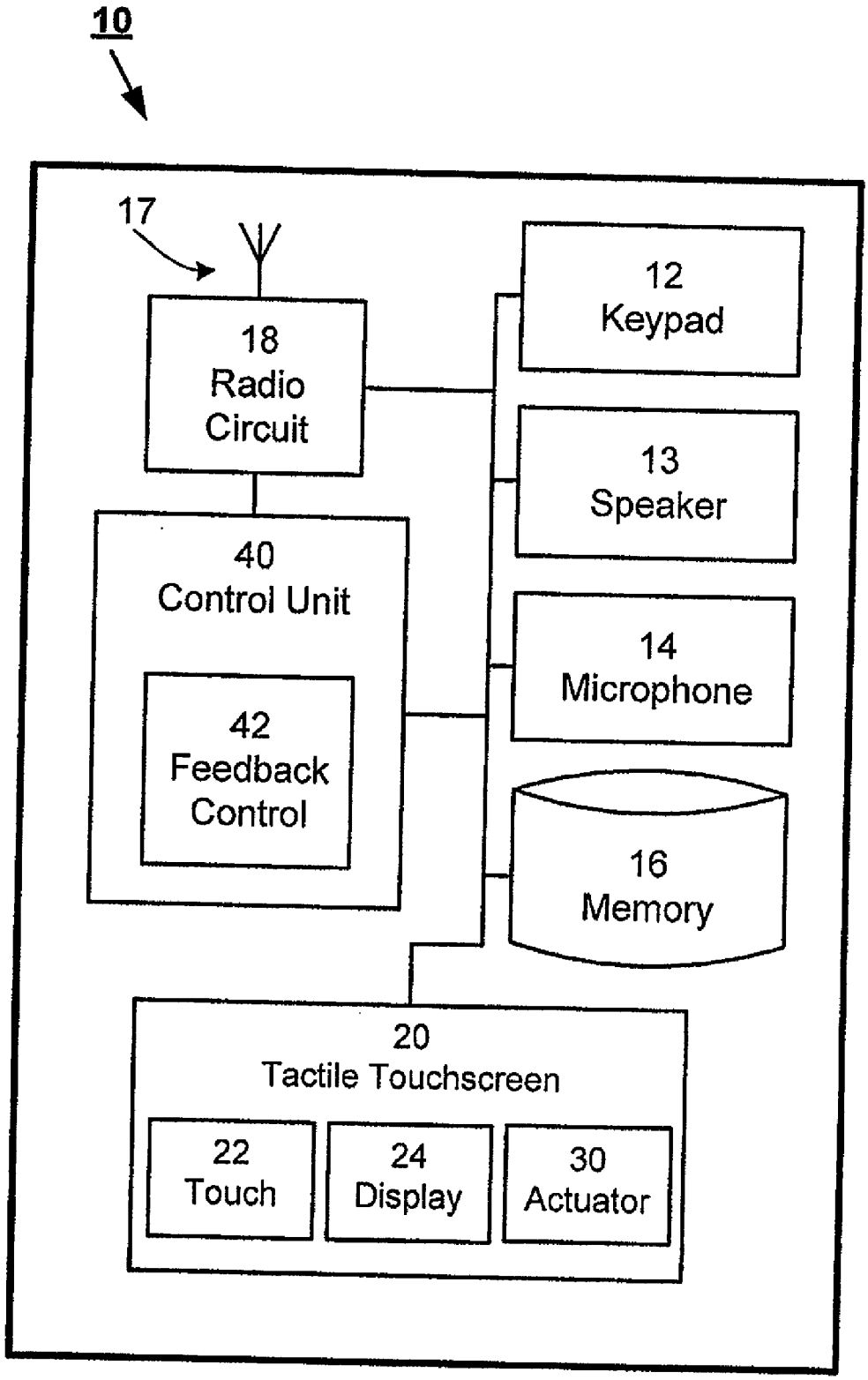
10
17
18
Radio
Circuit
12
Keypad
13
Speaker
40
Control Unit
42
Feedback
Control
14
Microphone
16
Memory
20
Tactile Touchscreen
22
Touch
24
Display
30
Actuator

Fig. 2