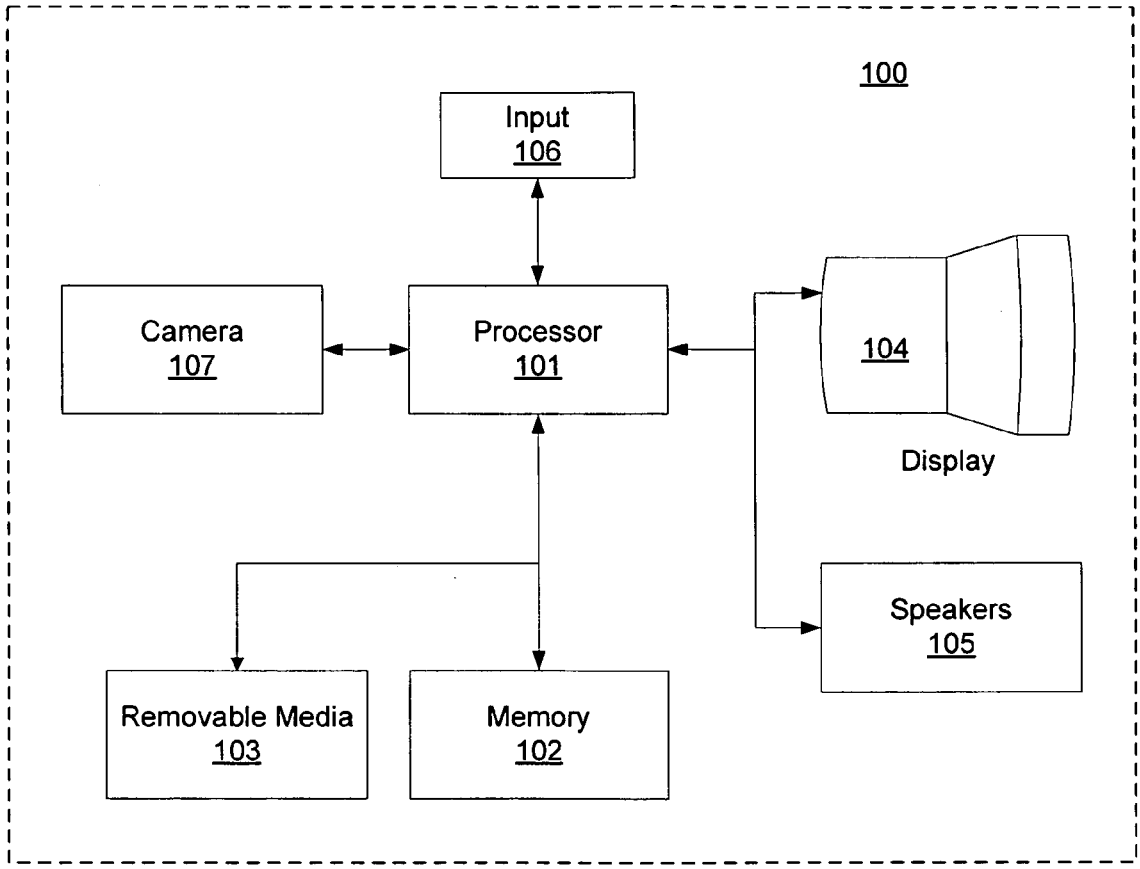
100
Input
106
Camera
107
Processor
101
104
Display
Speakers
105
Removable Media
103
Memory
102

Figure 1