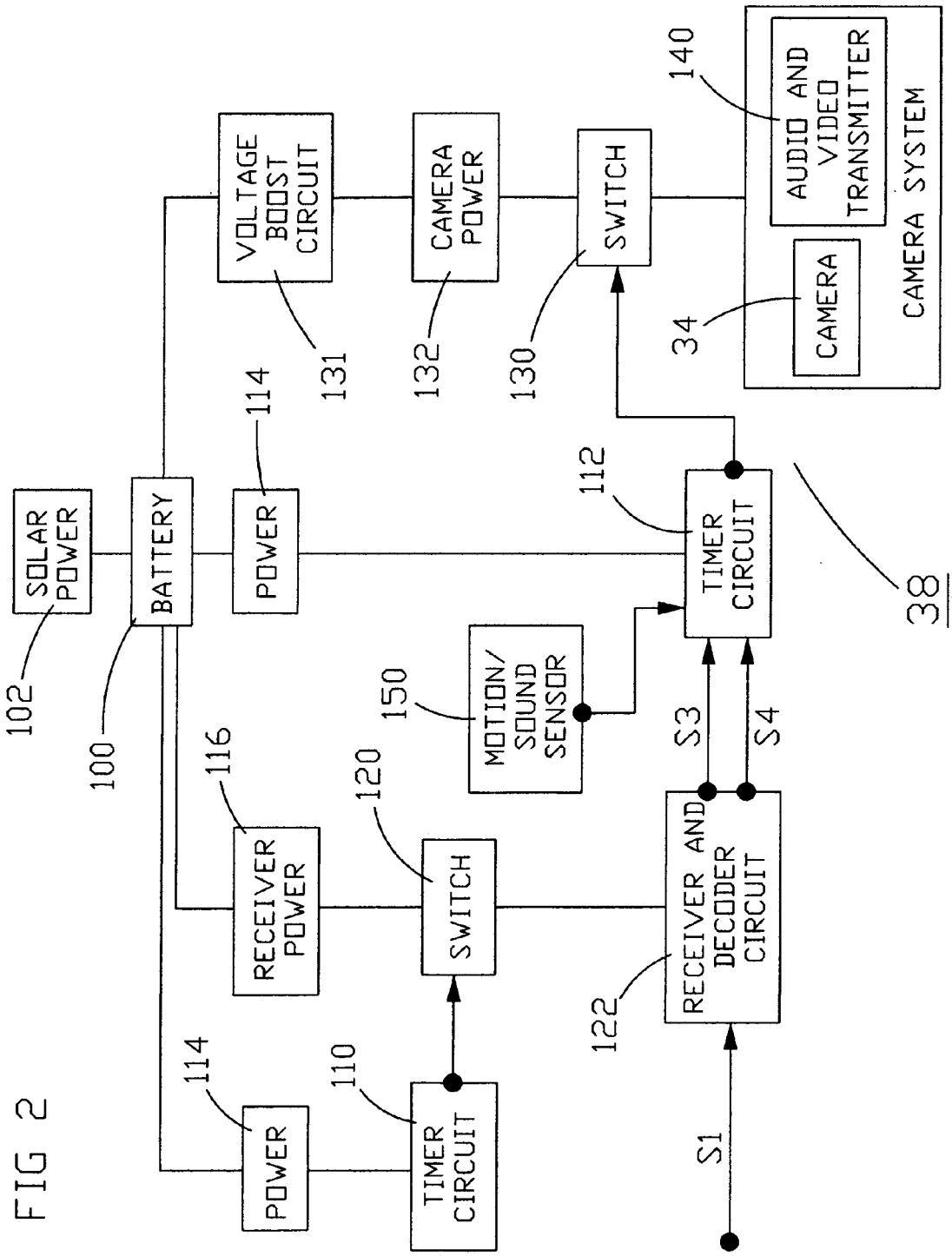
SOLAR POWER
102
BATTERY
100
VOLTAGE BOOST CIRCUIT
131
CAMERA POWER
132
SWITCH
130
AUDIO AND VIDEO TRANSMITTER
140
CAMERA
34
CAMERA SYSTEM
38
POWER
114
TIMER CIRCUIT
112
MOTION/ SOUND SENSOR
150
S3
S4
RECEIVER AND DECODER CIRCUIT
122
RECEIVER POWER
116
SWITCH
120
POWER
114
TIMER CIRCUIT
110
S1

FIG 2