[Fig. 1]

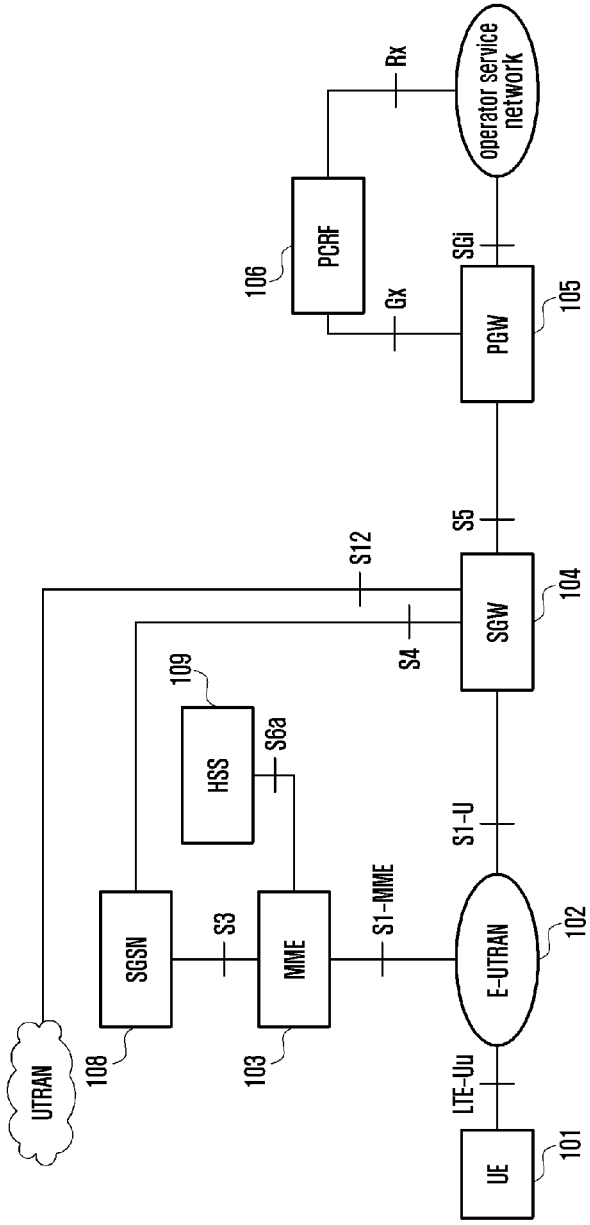
operator service network
Rx
PCRF
106
SGi
Gx
PGW
105
S5
S12
SGW
104
S4
109
HSS
S6a
S1-U
SGSN
S3
MME
S1-MME
E-UTRAN
102
UTRAN
108
103
LTE-Uu
UE
101