FIG. 2

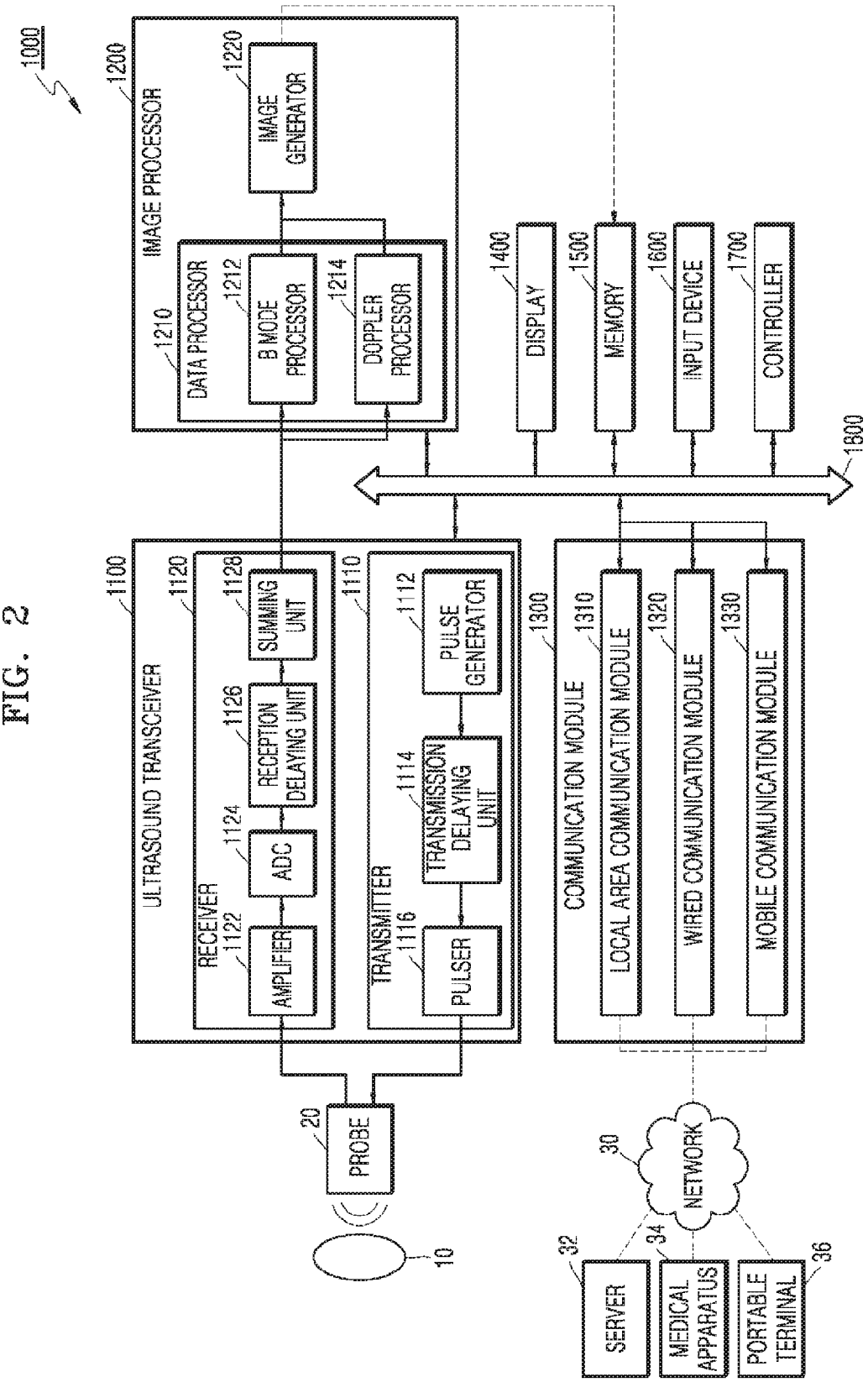
1000
1200
IMAGE PROCESSOR
1220
IMAGE GENERATOR
1210
DATA PROCESSOR
1212
B MODE PROCESSOR
1214
DOPPLER PROCESSOR
1400
DISPLAY
1500
MEMORY
1600
INPUT DEVICE
1700
CONTROLLER
1800
1100
ULTRASOUND TRANSCEIVER
1120
RECEIVER
1122
AMPLIFIER
1124
ADC
1126
RECEPTION DELAYING UNIT
1128
SUMMING UNIT
1110
TRANSMITTER
1112
PULSE GENERATOR
1114
TRANSMISSION DELAYING UNIT
1116
PULSER
1300
COMMUNICATION MODULE
1310
LOCAL AREA COMMUNICATION MODULE
1320
WIRED COMMUNICATION MODULE
1330
MOBILE COMMUNICATION MODULE
20
PROBE
10
30
NETWORK
32
SERVER
34
MEDICAL APPARATUS
36
PORTABLE TERMINAL