FIG. 1

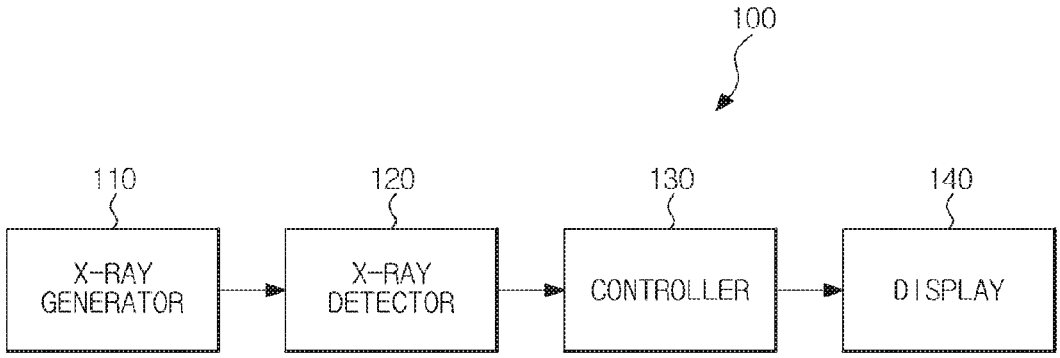
100
110
X-RAY GENERATOR
120
X-RAY DETECTOR
130
CONTROLLER
140
DISPLAY