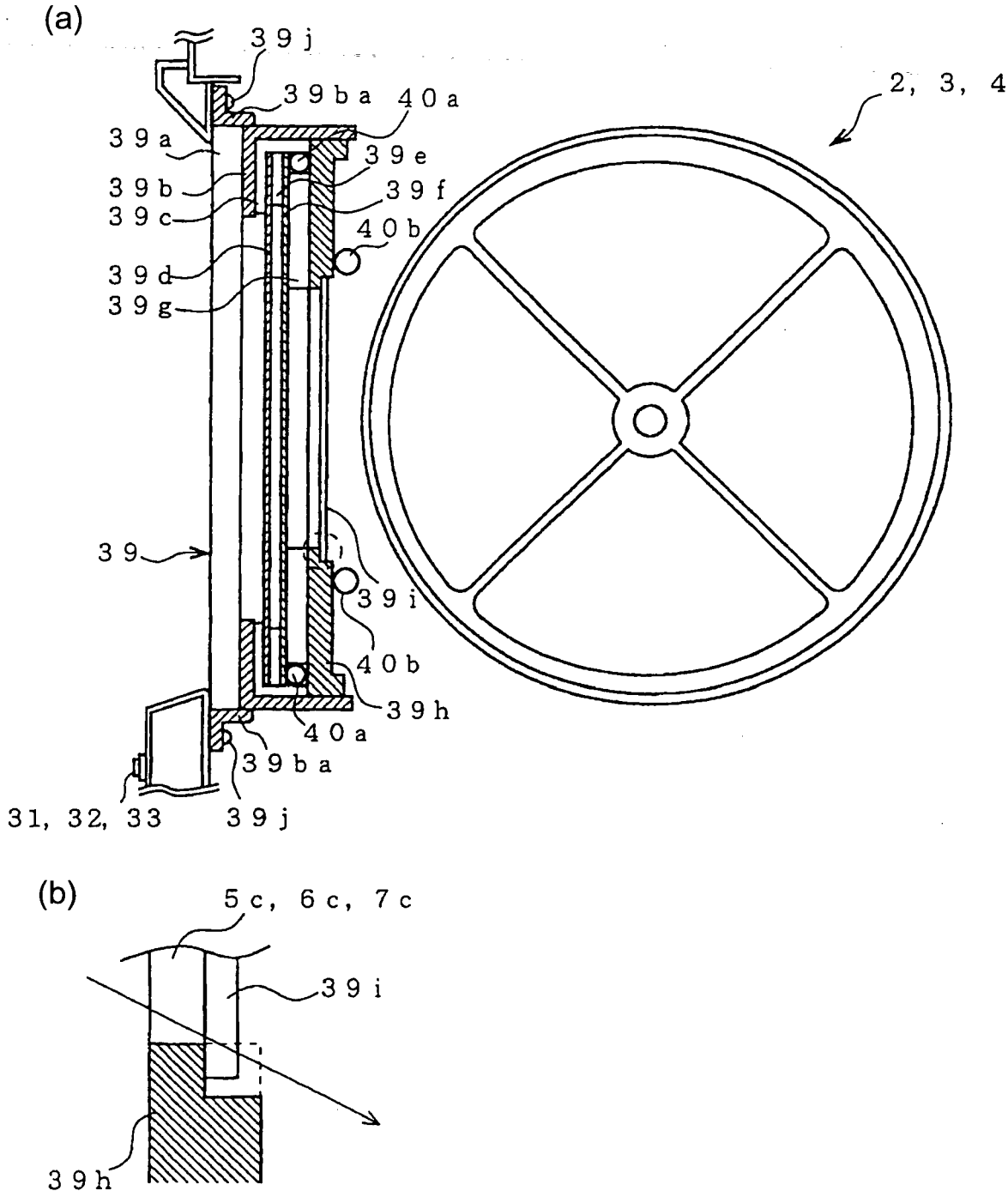
(a)
39j
39ba
40a
2, 3, 4
39a
39e
39b
39f
39c
40b
39d
39g
39
39i
40b
39h
40a
39ba
31, 32, 33
39j
(b)
5c, 6c, 7c
39i
39h

Fig.3