(a)

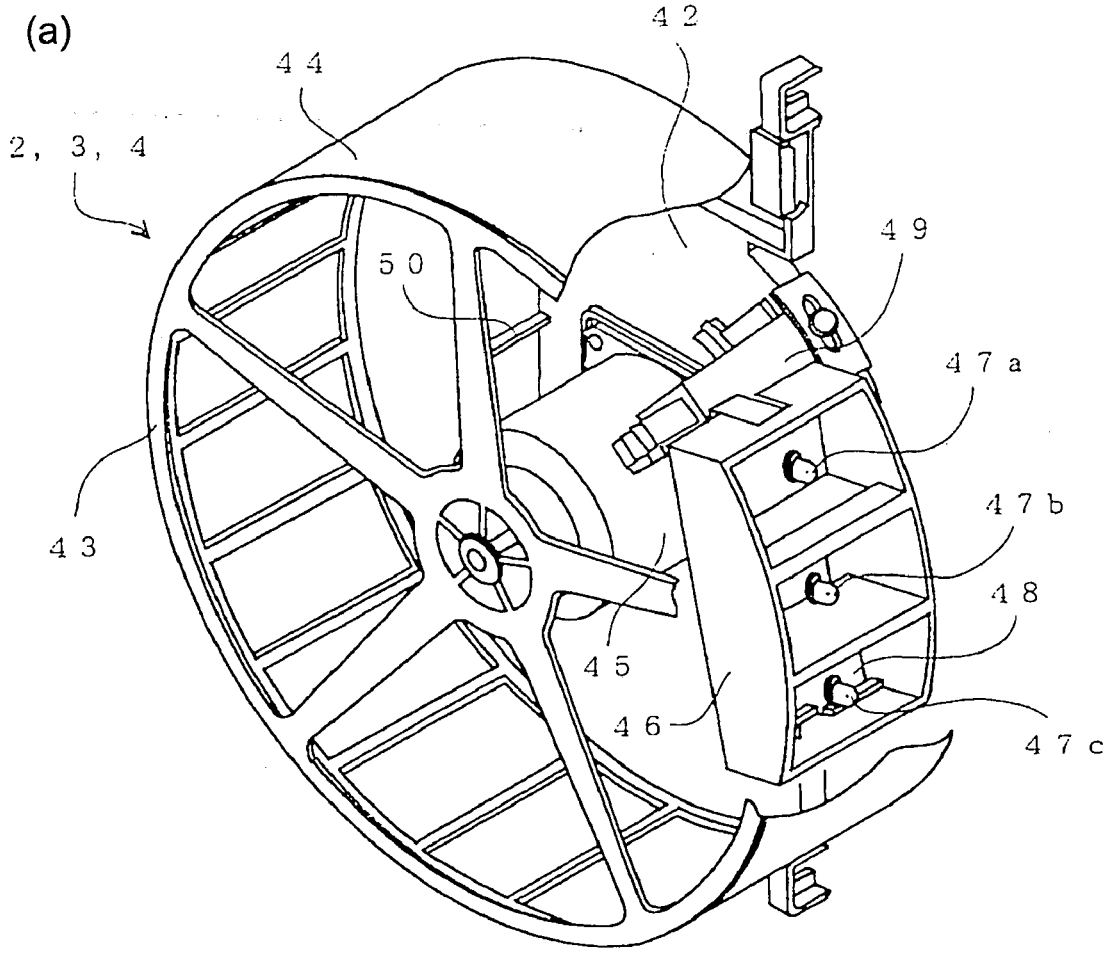

(b)

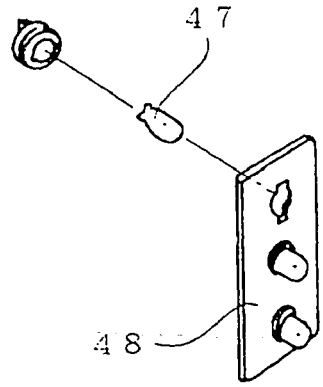

Fig.7