FIG. 3
Related Art

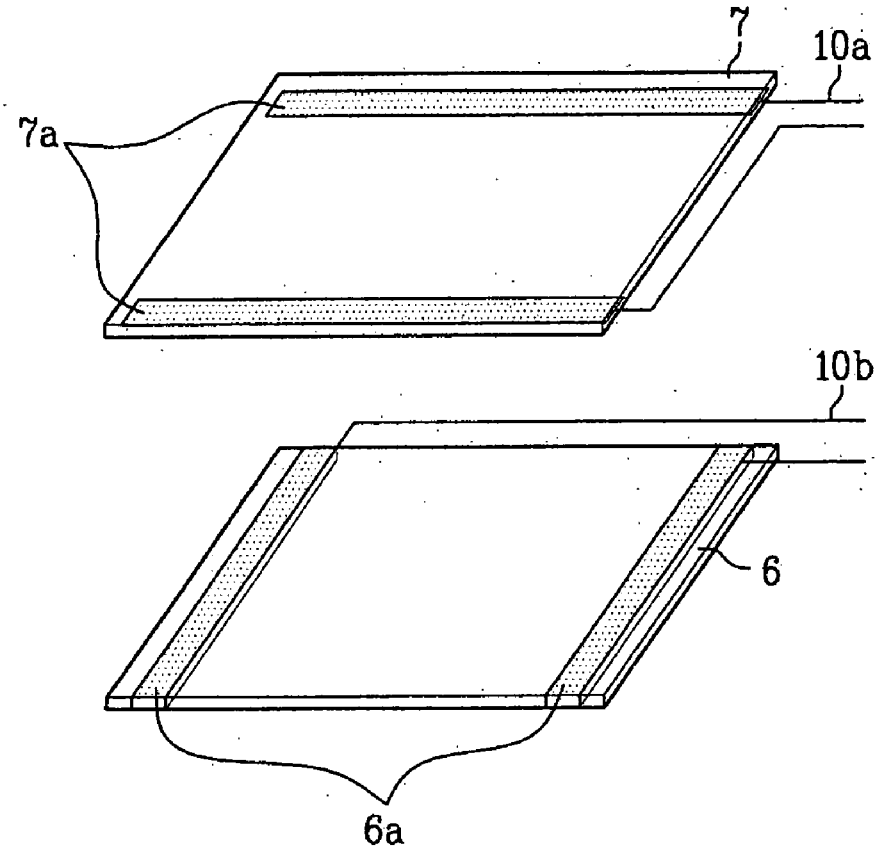
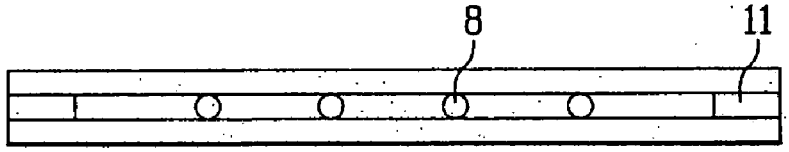
FIG. 4
Related Art