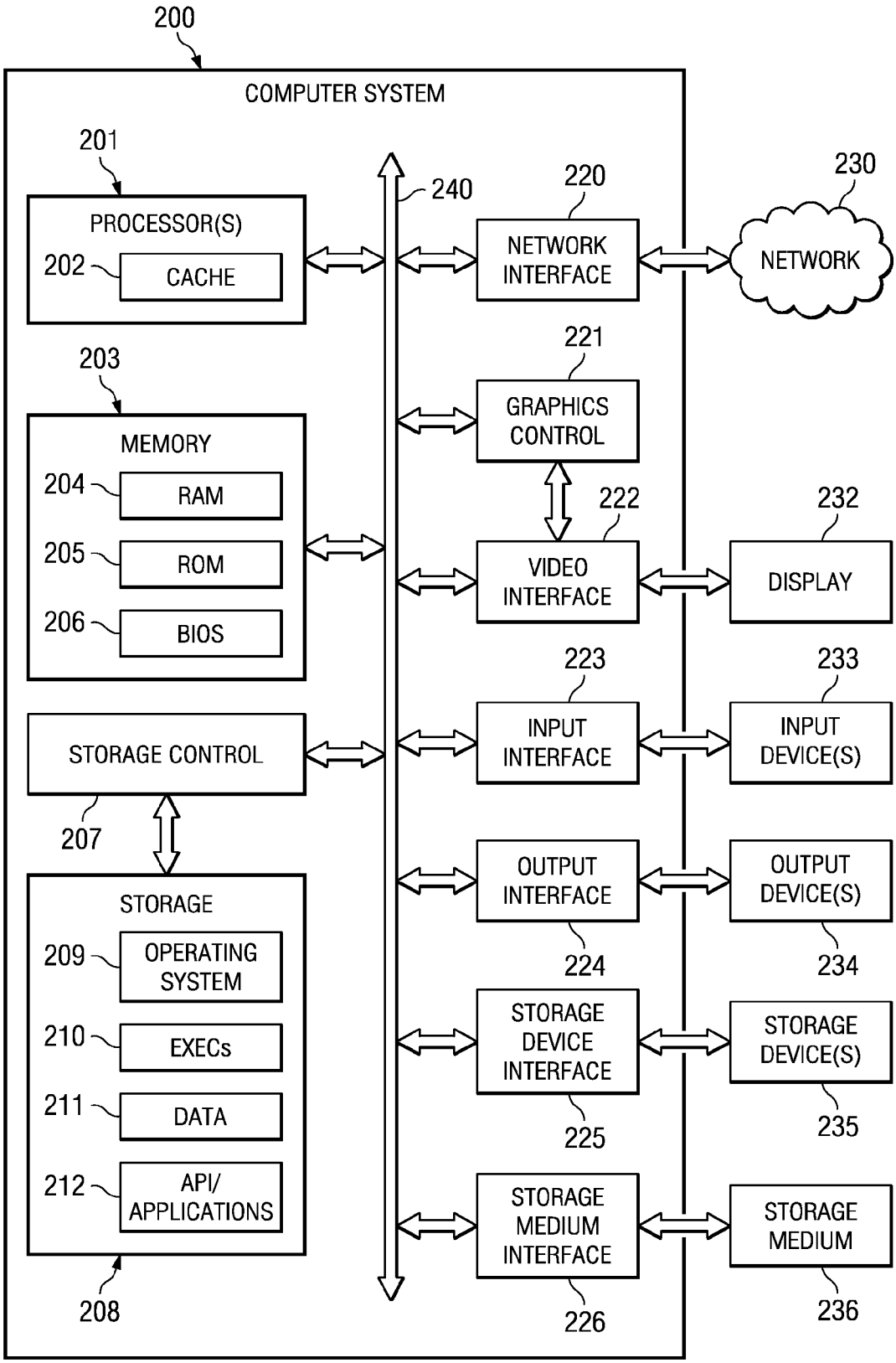
200
COMPUTER SYSTEM
201
PROCESSOR(S)
202
CACHE
203
MEMORY
204
RAM
205
ROM
206
BIOS
STORAGE CONTROL
207
STORAGE
209
OPERATING SYSTEM
210
EXECs
211
DATA
212
API/ APPLICATIONS
208
240
220
NETWORK INTERFACE
221
GRAPHICS CONTROL
222
VIDEO INTERFACE
223
INPUT INTERFACE
OUTPUT INTERFACE
224
STORAGE DEVICE INTERFACE
225
STORAGE MEDIUM INTERFACE
226
230
NETWORK
232
DISPLAY
233
INPUT DEVICE(S)
OUTPUT DEVICE(S)
234
STORAGE DEVICE(S)
235
STORAGE MEDIUM
236

FIG. 2