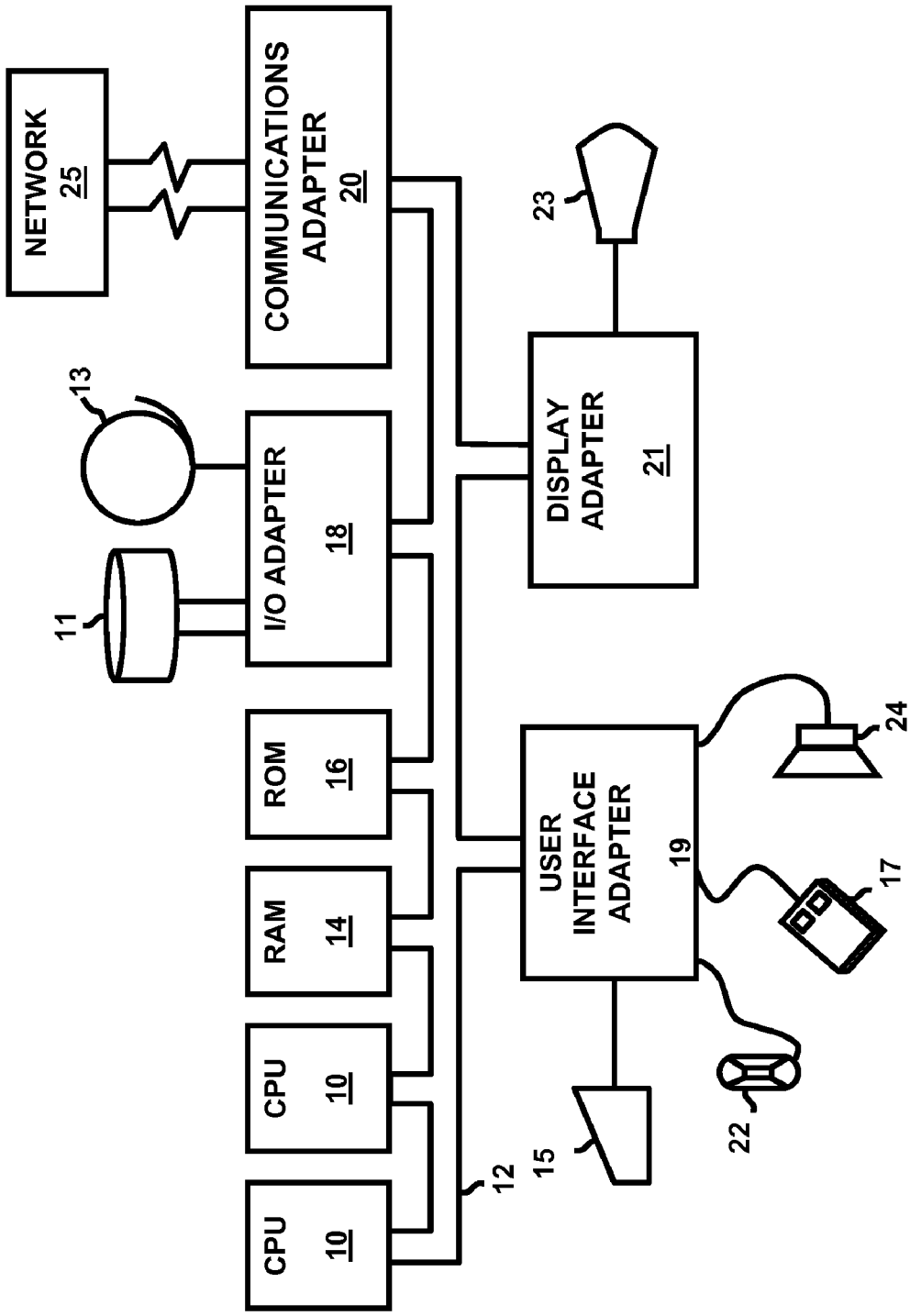
NETWORK
25
COMMUNICATIONS ADAPTER
20
13
11
I/O ADAPTER
18
23
DISPLAY ADAPTER
21
ROM
16
RAM
14
CPU
10
CPU
10
USER INTERFACE ADAPTER
19
24
17
22
15
12

FIG. 28