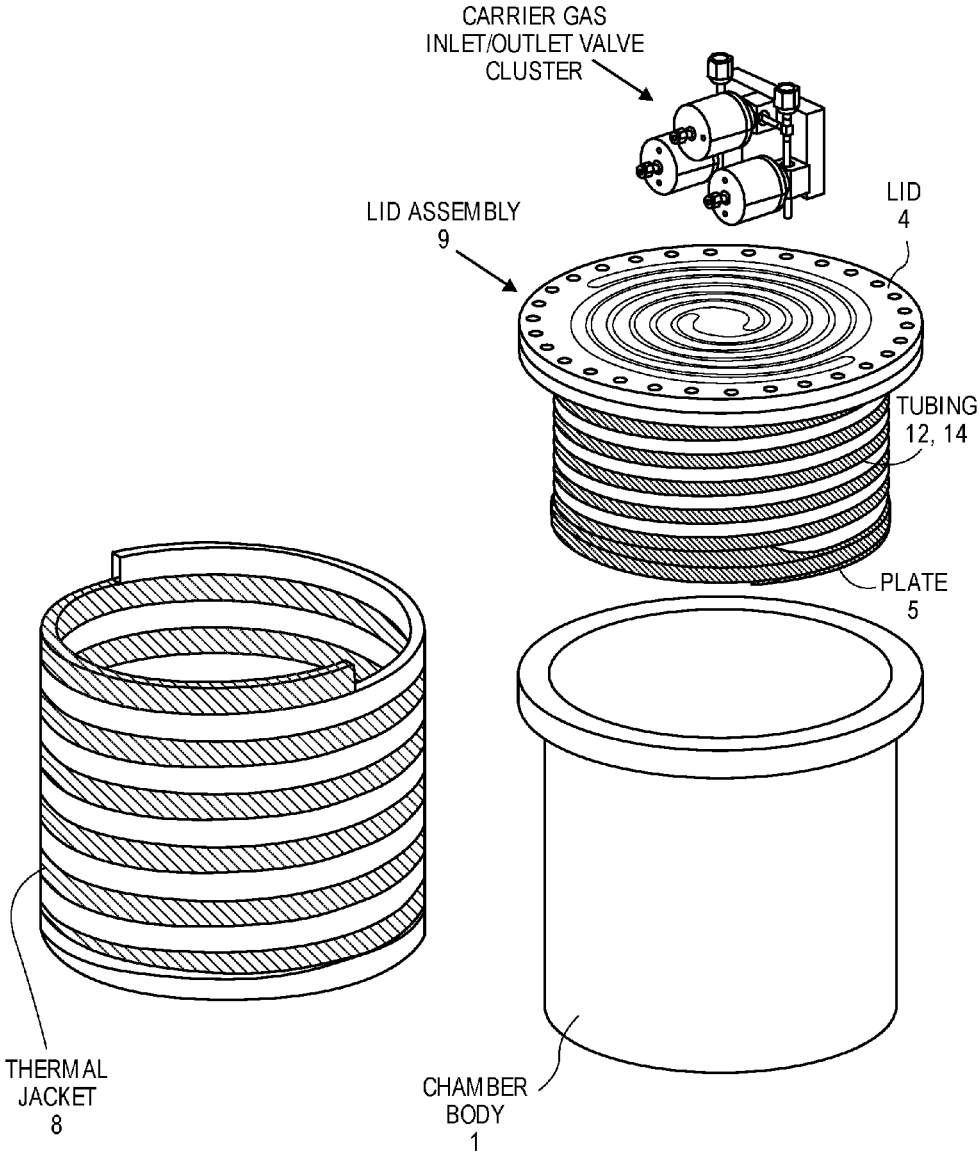
CARRIER GAS
INLET/OUTLET VALVE
CLUSTER
LID ASSEMBLY
9
LID
4
TUBING
12, 14
PLATE
5
THERMAL
JACKET
8
CHAMBER
BODY
1

FIG. 2