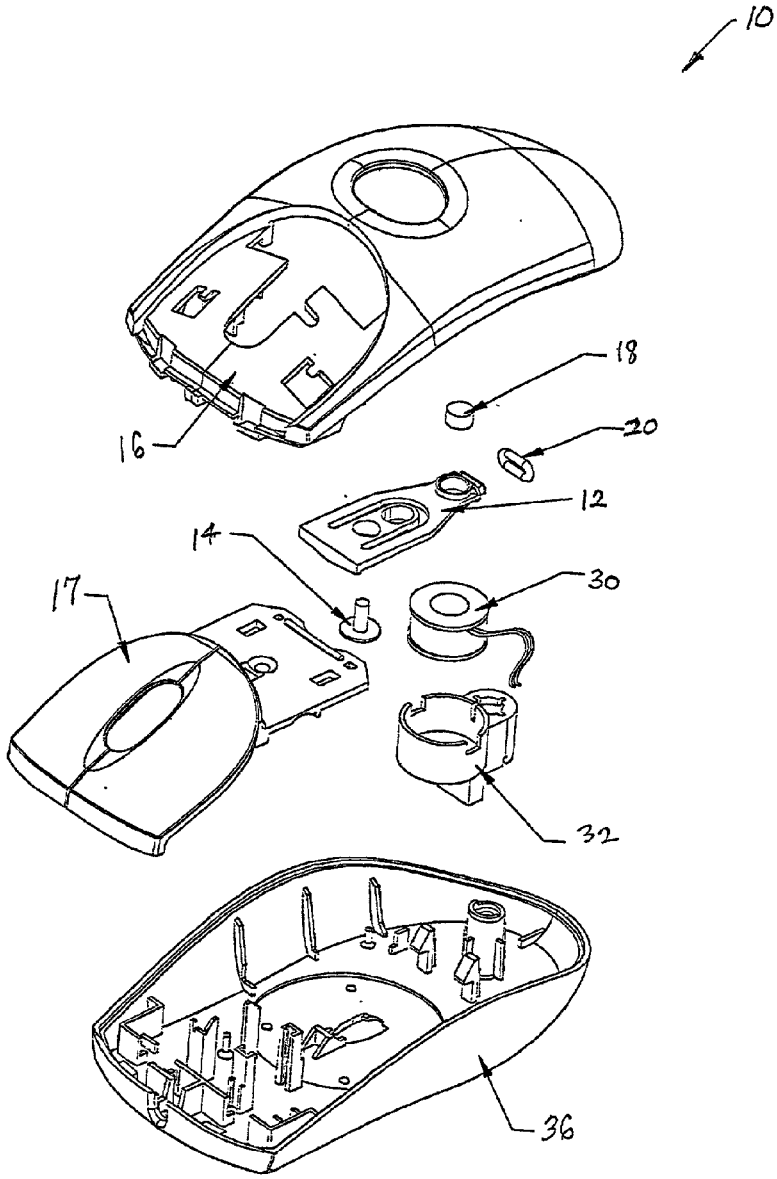

FIGURE 5

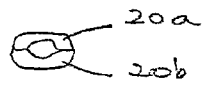

FIGURE 5a

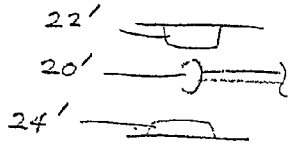

FIG. 5b