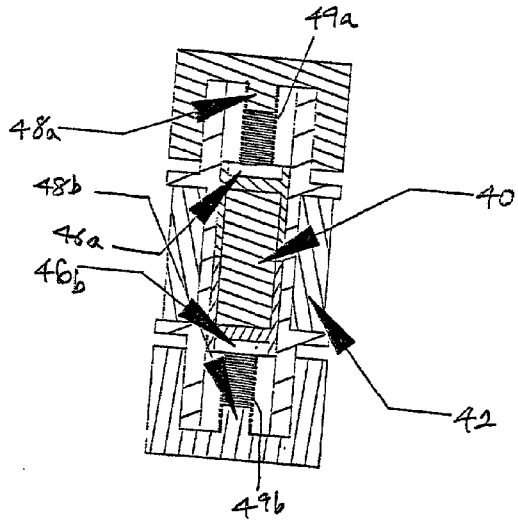


FIGURE 6

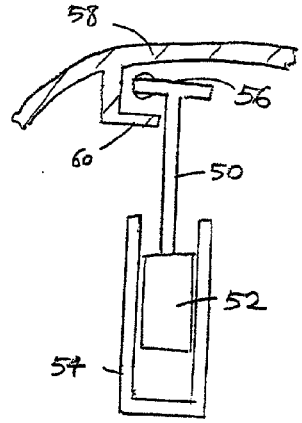


FIGURE 7

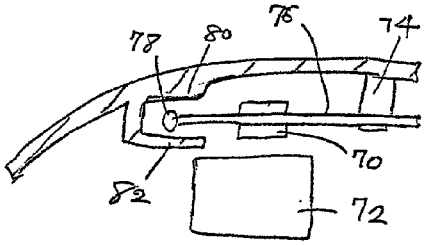


FIGURE 8

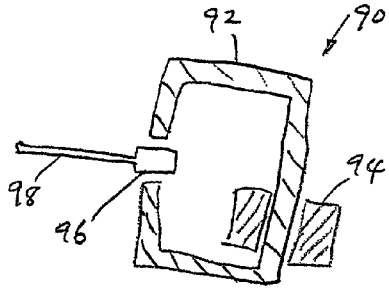


FIGURE 9

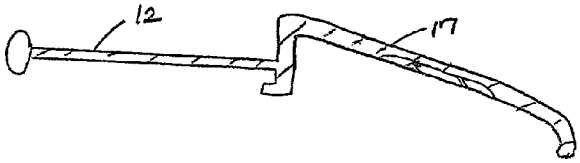


FIGURE 5c