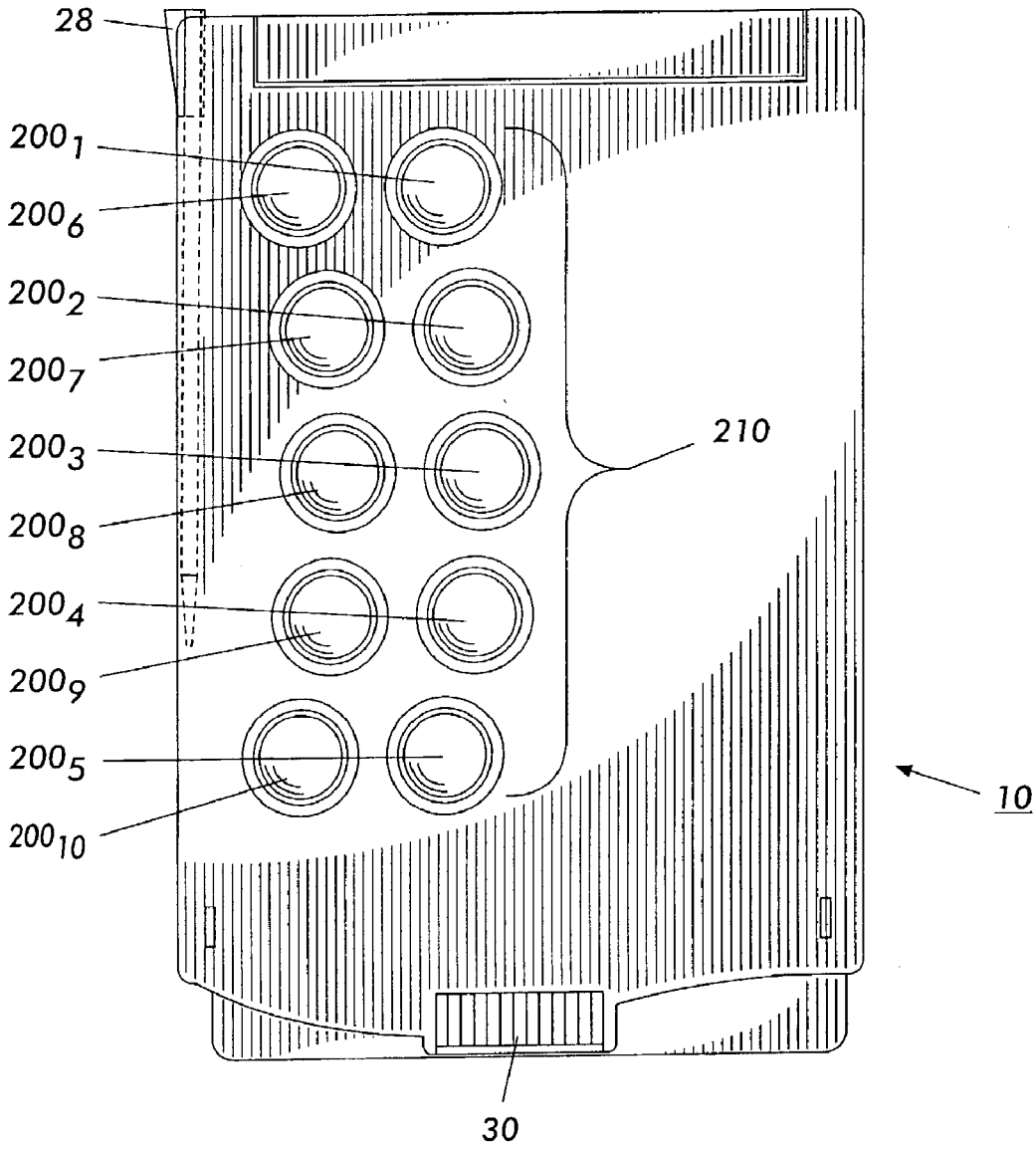
28
200_1
200_6
200_2
200_7
200_3
200_8
200_4
200_9
200_5
200_{10}
210
10
30

FIG. 7