FIG.4

(a)

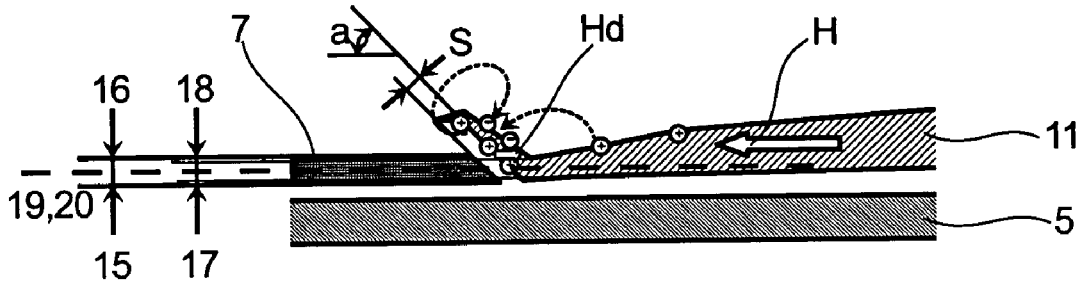
7
a
S
Hd
H
16
18
11
19,20
5
15
17

(b)

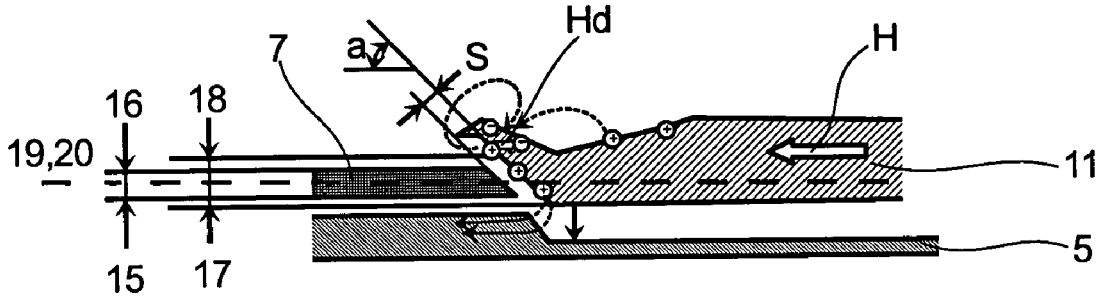
Hd
7
a
S
H
16
18
19,20
11
5
15
17

(c)

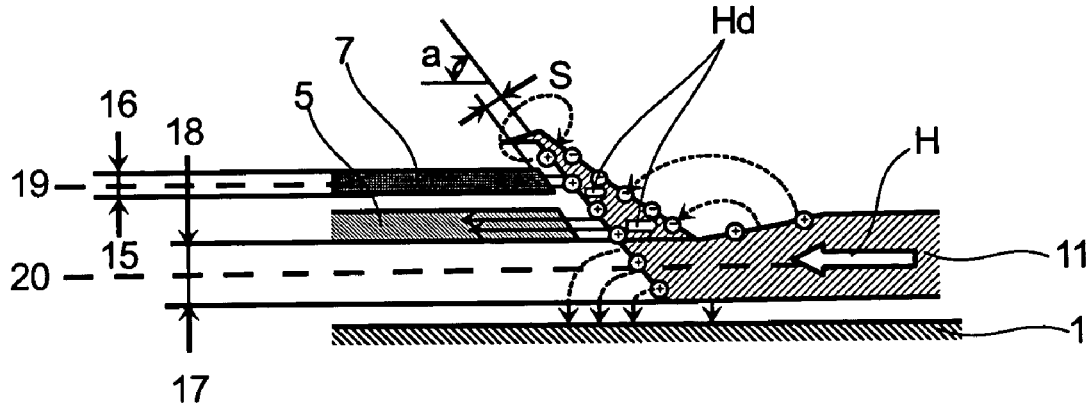
Hd
7
a
S
5
16
18
H
19
15
20
11
1
17