FIG. 5

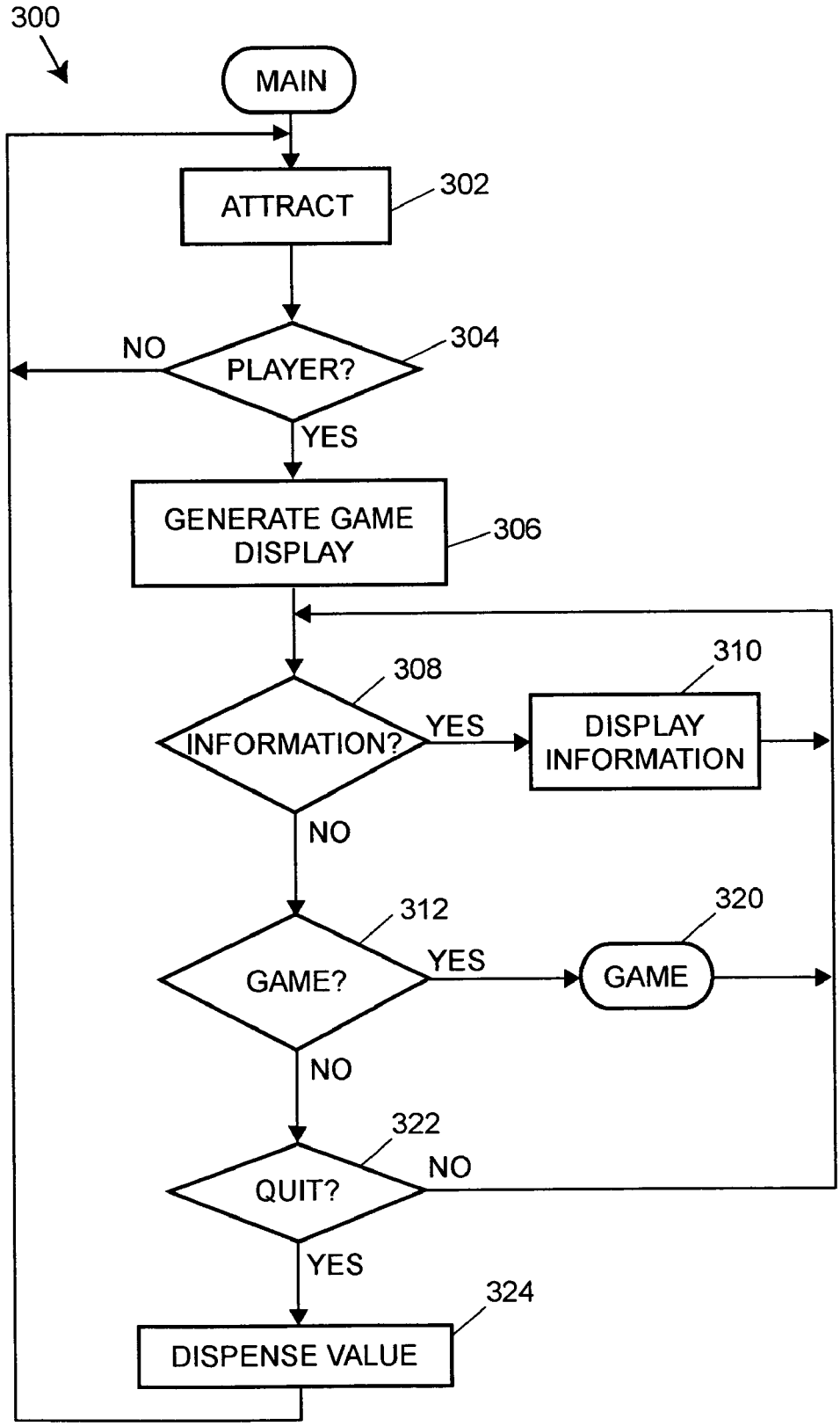
300
MAIN
ATTRACT
302
PLAYER?
304
NO
YES
GENERATE GAME DISPLAY
306
INFORMATION?
308
YES
DISPLAY INFORMATION
310
NO
GAME?
312
YES
GAME
320
NO
QUIT?
322
NO
YES
DISPENSE VALUE
324