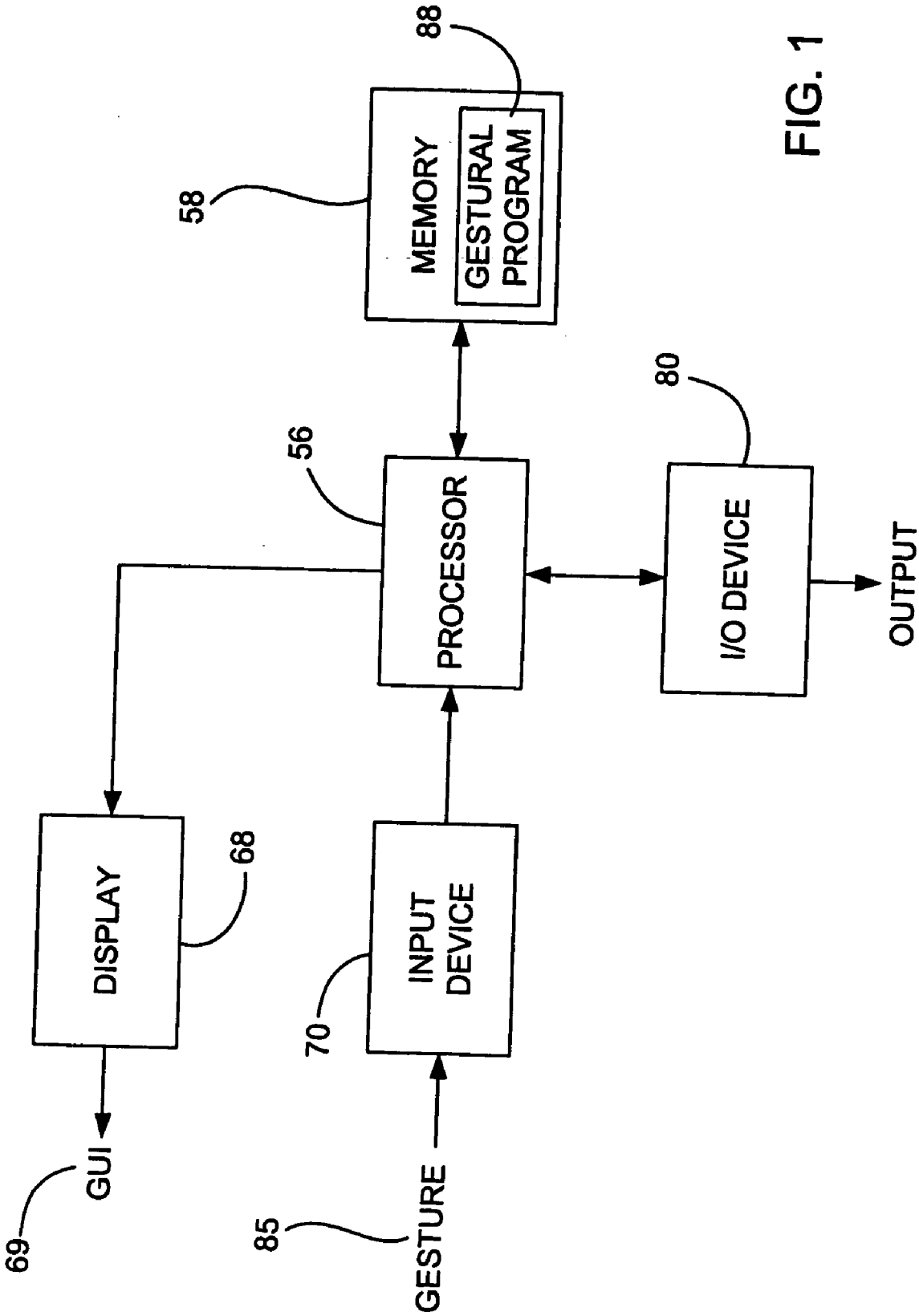
88
58
MEMORY
GESTURAL PROGRAM
80
56
PROCESSOR
I/O DEVICE
OUTPUT
DISPLAY
68
INPUT DEVICE
70
GUI
69
GESTURE
85

FIG. 1